FITTACKS

Spectacle Blinds, Spades and Spacers

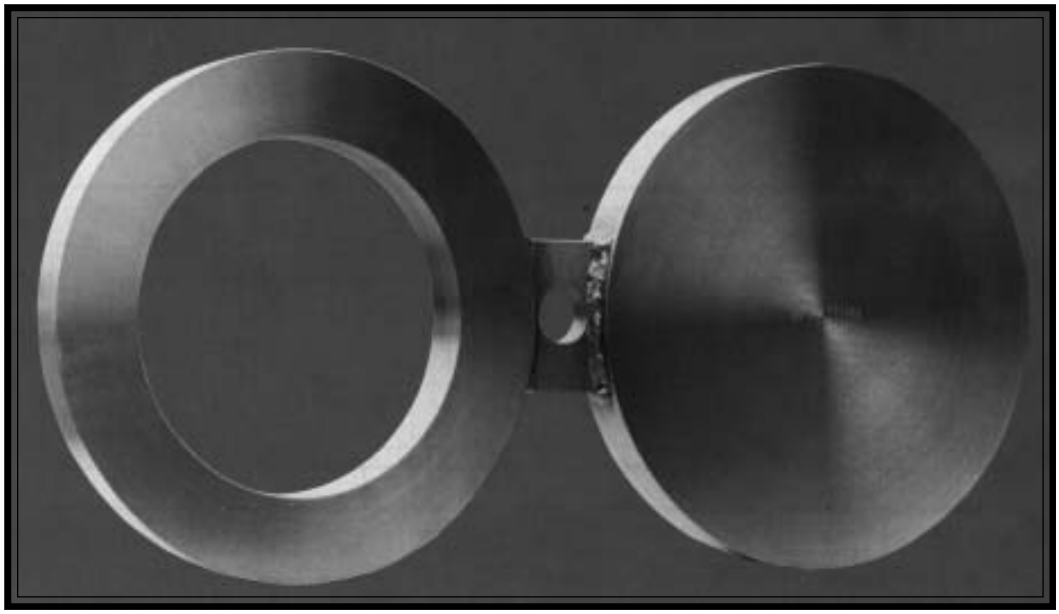

Execution : **Meets AGA, ASME, BS, DIN and all clients requirements.**

Finish : **Raised Face.**

Options : **Lifting eyes for larger sizes.**
Carbon steel with medium contactedparts fully covered by a corrosion resistant lining.
W.P.S. and P.Q.R. available for large size welded items.

FITTACKS

Carrier Rings

Execution : **Meets AGA, ASME, BS, DIN, ISO and all clients requirements.**

Plate types : **Square edge, quarter circle, conical entrance, concentric, eccentric and segmental.**

Options : **Flange taps, corner taps, ring chamber, integral.**
Drain- and/or venthole in orifice plate.
Computer calculations to any international standard.
Gaskets other than flat gaskets.

FITTACKS

Tappings are standard 1/2" NPT female (1 each per ring) but Socket Weld, Butt Weld and Flanged connections are optional.

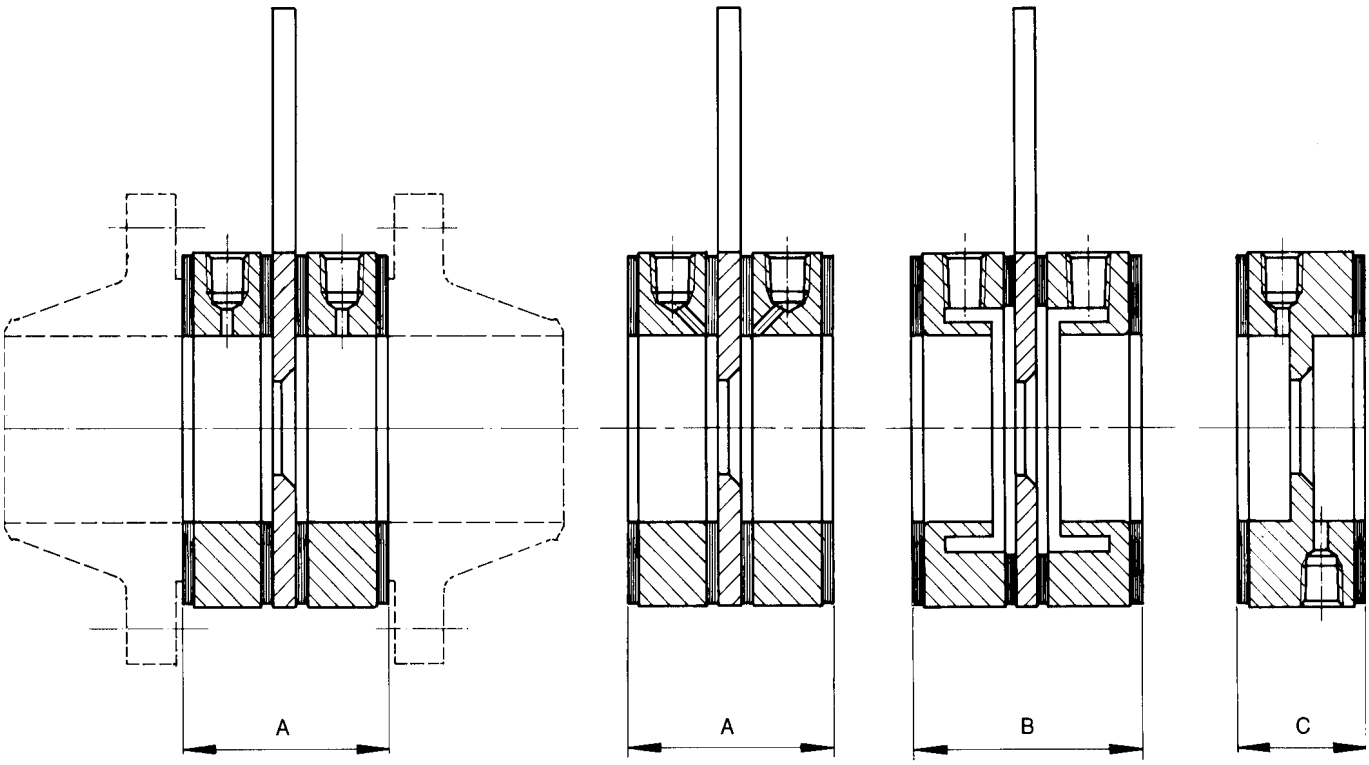

Fig. 1
Flange taps

Fig. 2
Corner taps

Fig. 3
Ring chambers

Fig. 4
Corner taps

Note: flanges by customer

Norm. Line Size	Inches	1/2"	3/4"	1"	1.1/4"	1.1/2"	2"	2.1/2"	3"	4"	5"	6"	8"	10"	12"	14"	16"	18"	20"	24"
	mm	15	20	25	32	40	50	65	80	100	125	150	200	250	300	350	400	450	500	600
	A	84	84	84	84	84	85	85	85	85	85	85	88	88	88	91	91	94	94	98
	B	84	84	84	84	84	85	85	85	85	85	85	88	88	88	91	91	94	94	98
	C	40	40	40	40	40	41	41	41	41	41	41	44	44	46	49	51	54	54	60

Dimensions A, B and C based on flat gaskets (1,5 mm thick)
Dimensions of orifice plates as per our Sheets

FITTACKS

ASME B 16.9

Concentric and Eccentric Reducers

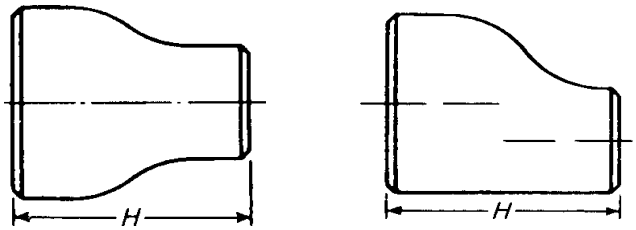

Nominal Pipe Size (NPS)	Outside Diameter Pipe		Wall Thickness Pipe Schedule / mm.								Length H
	Large End	Small End	Large End	Small End	Large End	Small End	Large End	Small End	Large End	Small End	
Inch	mm	mm	Schedule 5S		Schedule 10S		Schedule 40S		Schedule 80S		mm
3/4 x 1/2	26.7	21.3	1.65	1.65	2.11	2.11	2.87	2.77	3.91	3.73	38
3/4 x 3/8	26.7	17.1			2.11	1.65	2.87	2.31	3.91	3.20	38
1 x 3/4	33.4	26.7	1.65	1.65	2.77	2.11	3.38	2.87	4.55	3.91	51
1 x 1/2	33.4	21.3	1.65	1.65	2.77	2.11	3.38	2.77	4.55	3.73	51
1.1/4 x 1	42.2	33.4	1.65	1.65	2.77	2.77	3.56	3.38	4.85	4.55	51
1.1/4 x 3/4	42.2	26.7	1.65	1.65	2.77	2.11	3.56	32.87	4.85	391	51
1.1/4 x 1/2	42.2	21.3	1.65	1.65	2.77	2.11	3.56	2.77	4.85	3.73	51
1.1/2 x 1.1/4	48.3	42.2	1.65	1.65	2.77	2.77	3.68	3.56	5.08	4.85	64
1.1/2 x 1	48.3	33.4	1.65	1.65	2.77	2.77	3.68	3.38	5.08	4.55	64
1.1/2 x 3/4	48.3	26.7	1.65	1.65	2.77	2.11	3.68	2.87	5.08	3.91	64
1.1/2 x 1/2	48.3	21.3	1.65	1.65	2.77	2.11	3.68	2.77	5.08	3.73	64
2 x 1.1/2	60.3	48.3	1.65	1.65	2.77	2.77	3.91	3.68	5.54	5.08	76
2 x 1.1/4	60.3	42.2	1.65	1.65	2.77	2.77	3.91	3.56	5.54	4.85	76
2 x 1	60.3	3.4	1.65	1.65	2.77	2.77	3.91	3.38	5.54	4.55	76
2 x 3/4	60.3	26.7	1.65	1.65	2.77	2.11	3.91	2.87	5.54	3.91	76
2.1/2 x 2	73.0	60.3	2.11	1.65	3.05	2.77	5.16	3.91	7.01	5.54	89
2.1/2 x 1.1/2	73.0	48.3	2.11	1.65	3.05	2.77	5.16	3.68	7.01	5.08	89
2.1/2 x 1.1/4	73.0	42.2	2.11	1.65	3.05	2.77	5.16	3.56	7.01	4.85	89
2.1/2 x 1	73.0	33.4	2.11	1.65	3.05	2.77	5.16	3.38	7.01	4.55	89
3 x 2.1/2	88.9	73.0	2.11	2.11	3.05	3.05	5.49	5.16	7.62	7.01	89
3 x 2	88.9	60.3	2.11	1.65	3.05	2.77	5.49	3.91	7.62	5.54	89
3 x 1.1/2	88.9	48.3	2.11	1.65	3.05	2.77	5.49	3.68	7.62	5.08	89
3 x 1.1/4	88.9	42.2	2.11	1.65	3.05	2.77	5.49	3.56	7.62	4.85	89

FITTACKS

ASME B 16.9

Concentric and Eccentric Reducers

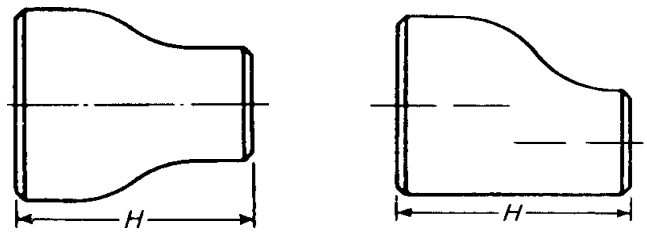

Nominal Pipe Size (NPS)	Outside Diameter Pipe		Wall Thickness Pipe Schedule / mm.								Length H
	Large End	Small End	Large End	Small End	Large End	Small End	Large End	Small End	Large End	Small End	
Inch	mm	mm	Schedule 5S		Schedule 10S		Schedule 40S		Schedule 80S		mm
3.1/2 x 3	**101.6**	**88.9**	2.11	2.11	3.05	3.05	5.74	5.49	8.08	7.62	**102**
3.1/2 x 2.1/2	**101.6**	**73.0**	2.11	2.11	3.05	3.05	5.74	5.16	8.08	7.01	**102**
3.1/2 x 2	**101.6**	**60.3**	2.11	1.65	3.05	2.77	5.74	3.91	8.08	5.54	**102**
3.1/2 x 1.1/2	**101.6**	**48.3**	2.11	1.65	3.05	2.77	5.74	3.68	8.08	5.08	**102**
3.1/2 x 1.1/4	**101.6**	**42.2**	2.11	1.65	3.05	2.77	5.74	3.56	8.08	4.85	**102**
4 x 3.1/2	**114.3**	**101.6**	2.11	2.11	3.05	3.05	6.02	5.74	8.56	8.08	**102**
4 x 3	**114.3**	**88.9**	2.11	2.11	3.05	3.05	6.02	5.49	8.56	7.62	**102**
4 x 2.1/2	**114.3**	**73.0**	2.11	2.11	3.05	3.05	6.02	5.16	8.56	7.01	**102**
4 x 2	**114.3**	**60.3**	2.11	1.65	3.05	2.77	6.02	3.91	8.56	5.54	**102**
4 x 1.1/2	**114.3**	**48.3**	2.11	1.65	3.05	2.77	6.02	3.68	8.56	5.08	**102**
5 x 4	**141.3**	**114.3**	2.77	2.11	3.40	3.05	6.55	6.02	9.53	8.56	**127**
5 x 3.1/2	**141.3**	**101.6**	2.77	2.11	3.40	3.05	6.55	5.74	9.53	8.08	**127**
5 x 3	**141.3**	**88.9**	2.77	2.11	3.40	3.05	6.55	5.49	9.53	7.62	**127**
5 x 2.1/2	**141.3**	**73.0**	2.77	2.11	3.40	3.05	6.55	5.16	9.53	7.01	**127**
5 x 2	**141.3**	**60.3**	2.77	1.65	3.40	2.77	6.55	3.91	9.53	5.54	**127**
6 x 5	**168.3**	**141.3**	2.77	2.77	3.40	3.40	7.11	6.55	10.97	9.53	**140**
6 x 4	**168.3**	**114.3**	2.77	2.11	3.40	3.05	7.11	6.02	10.97	8.56	**140**
6 x 3.1/2	**168.3**	**101.6**	2.77	2.11	3.40	3.05	7.11	5.74	10.97	8.08	**140**
6 x 3	**168.3**	**88.9**	2.77	2.11	3.40	3.05	7.11	5.49	10.97	7.62	**140**
6 x 2.1/2	**168.3**	**73.0**	2.77	2.11	3.40	3.05	7.11	5.16	10.97	7.01	**140**
8 x 6	**219.1**	**168.3**	2.77	2.77	3.76	3.40	8.18	7.11	12.70	10.97	**152**
8 x 5	**219.1**	**141.3**	2.77	2.77	3.76	3.40	8.18	6.55	12.70	9.53	**152**
8 x 4	**219.1**	**1114.3**	2.77	2.11	3.76	3.05	8.18	6.02	12.70	8.56	**152**
8 x 3.1/2	**219.1**	**101.6**	2.77	2.11	3.76	3.05	8.18	5.74	12.70	8.08	**152**

FITTACKS

ASME B 16.9

Concentric and Eccentric Reducers

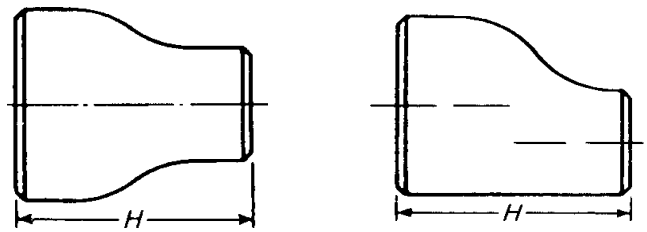

Nominal Pipe Size (NPS)	Outside Diameter Pipe		Wall Thickness Pipe Schedule / mm.								Length H
	Large End	Small End	Large End	Small End	Large End	Small End	Large End	Small End	Large End	Small End	
Inch	mm	mm	Schedule 5S		Schedule 10S		Schedule 40S		Schedule 80S		mm
10 x 8	**273.1**	**219.1**	3.40	2.77	4.19	3.76	9.27	8.18	12.70	12.70	**178**
10 x 6	**273.1**	**168.3**	3.40	2.77	4.19	3.40	9.27	7.11	12.70	10.97	**178**
10 x 5	**273.1**	**141.3**	3.40	2.77	4.19	3.40	9.27	6.55	12.70	9.53	**178**
10 x 4	**273.1**	**114.3**	3.40	2.11	4.19	3.05	9.27	6.02	12.70	8.56	**178**
12 x 10	**323.9**	**273.1**	3.96	3.40	4.57	4.19	9.53	9.27	12.70	12.70	**203**
12 x 8	**323.9**	**219.1**	3.96	2.77	4.57	3.76	9.53	8.18	12.70	12.70	**203**
12 x 6	**323.9**	**168.3**	3.96	2.77	4.57	3.40	9.53	7.11	12.70	10.97	**203**
12 x 5	**323.9**	**141.1**	3.96	2.77	4.57	3.40	9.53	6.55	12.70	9.53	**203**
14 x 12	**355.6**	**323.9**	3.96	3.96	4.78	4.57					**330**
14 x 10	**355.6**	**273.1**	3.96	3.40	4.78	4.19					**330**
14 x 8	**355.6**	**219.1**	3.96	2.77	4.78	3.76					**330**
14 x 6	**355.6**	**168.3**	3.96	2.77	4.78	3.40					**330**
16 x 14	**406.4**	**355.6**	4.19	3.96	4.78	4.78					**356**
16 x 12	**406.4**	**323.9**	4.19	3.96	4.78	4.57					**356**
16 x 10	**406.4**	**273.1**	4.19	3.40	4.78	4.19					**356**
16 x 8	**406.4**	**219.1**	4.19	2.77	4.78	3.76					**356**
18 x 16	**457.0**	**406.4**	4.19	4.19	4.78	4.78					**381**
18 x 14	**457.0**	**355.6**	4.19	3.96	4.78	4.78					**381**
18 x 12	**457.0**	**323.9**	4.19	3.96	4.78	4.57					**381**
18 x 10	**457.0**	**273.1**	4.19	3.40	4.78	4.19					**381**

FITTACKS

ASME B 16.9

Concentric and Eccentric Reducers

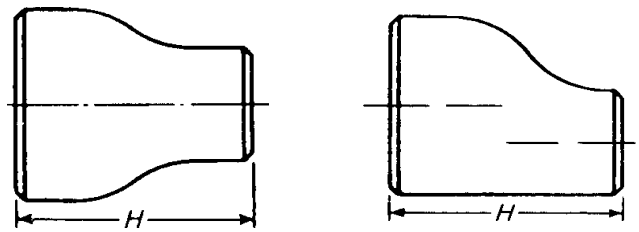

Nominal Pipe Size (NPS)	Outside Diameter Pipe		Wall Thickness of pipe Schedule / mm.								Length H
	Large End	Small End	Large End	Small End	Large End	Small End	Large End	Small End	Large End	Small End	
Inch	mm	mm	Schedule 5S		Schedule 10S		Schedule 40S		Schedule 80S		mm
20 x 18	**508.0**	**457.0**	4.78	4.19	5.54	4.78					**508**
20 x 16	**508.0**	**406.4**	4.78	4.19	5.54	4.78					**508**
20 x 14	**508.0**	**355.6**	4.78	3.96	5.54	4.78					**508**
20 x 12	**508.0**	**323.9**	4.78	3.96	5.54	4.57					**508**
22 x 20	**559.0**	**508.0**	4.78	4.78	5.54	5.54					**508**
22 x 18	**559.0**	**457.0**	4.78	4.19	5.54	4.78					**508**
22 x 16	**559.0**	**406.4**	4.78	4.19	5.54	4.78					**508**
22 x 14	**559.0**	**355.6**	4.78	3.96	5.54	4.78					**508**
24 x 22	**610.0**	**559.0**	5.54	4.78	6.35	5.5.4					**508**
24 x 20	**610.0**	**508.0**	5.54	4.78	6.35	5.54					**508**
24 x 18	**610.0**	**457.0**	5.54	4.19	6.35	4.78					**508**
24 x 16	**610.0**	**406.4**	5.54	4.19	6.35	4.78					**508**
30 x 24	**762**	**610.0**	6.35	5.54	7.92	6.35					**610**
30 x 20	**762**	**508.0**	6.35	4.78	7.92	5.54					**610**

FITTACKS

ASME B 16.9

Caps

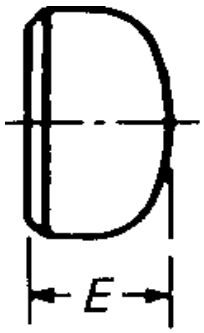

Caps made in according to ANSI / ASME B 16.9 shall be shaped ellipsoidal and conform to the shape requirements as given in the ASME Boiler and Pressure Vessel Code.

Nominal Pipe Size (NPS)	Outside Diameter Pipe	Wall thickness of Pipe Schedule / mm				E	Theoretical Weights kg / piece			
Inch	**mm**	**5 S**	**10 S**	**40 S**	**80 S**	**mm**	**5 S**	**10 S**	**40 S**	**80 S**
1/2"	**21.3**	1.65	2.11	2.77	3.73	**25**		0.11	0.30	0.30
3/4"	**26.7**	1.65	2.11	2.87	3.91	**25**		0.16	0.30	0.30
1"	**33.4**	1.65	2.77	3.38	4.55	**38**		0.25	0.30	0.30
1.1/4"	**42.2**	1.65	2.77	3.56	4.85	**38**		0.31	0.40	0.40
1.1/2"	**48.3**	1.65	2.77	3.68	5.08	**38**		0.38	0.50	0.60
2"	**60.3**	1.65	2.77	3.91	5.54	**38**		0.43	0.70	0.70
2.1/2"	**73.0**	2.11	3.05	5.16	7.01	**38**		0.45	0.70	1.00
3"	**88.9**	2.11	3.05	5.49	7.62	**51**		0.55	1.00	1.40
3.1/2"	**101.6**	2.11	3.05	5.74	8.08	**64**		0.74	1.40	1.80
4"	**114.3**	2.11	3.05	6.02	8.56	**64**		0.80	1.60	2.00
5"	**141.3**	2.77	3.40	6.55	9.53	**76**		1.20	2.30	3.00
6"	**168.3**	2.77	3.40	7.11	10.97	**89**		1.70	3.60	4.00
8"	**219.1**	2.77	3.76	8.18	12.70	**102**		2.90	5.50	7.00
10"	**273.0**	3.40	4.19	9.27	12.70	**127**		4.10	10.00	12.00
12"	**323.9**	3.96	4.57	9.53	12.70	**152**		7.10	14.00	18.00
14"	**355.6**	3.96	4.78			**165**				
16"	**406.4**	4.19	4.78			**178**				
18"	**457.0**	4.19	4.78			**203**				
20"	**508.0**	4.78	5.54			**229**				
22"	**559.0**	4.78	5.54			**254**				
24"	**610.0**	5.54	6.35			**267**				

FITTACKS

FITTACKS

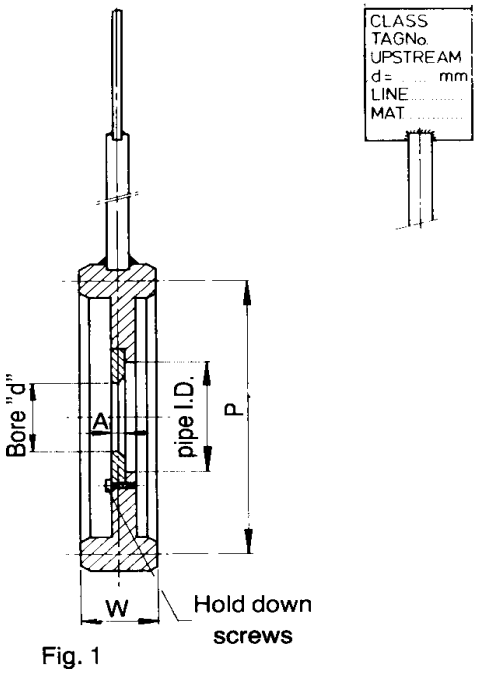

Fig. 1
Octogonal ring
to ANS B16.20
except dim. "W"

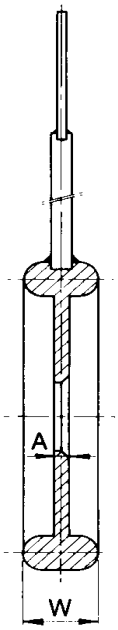

Fig. 2
Integral type Oval ring
to ANS B 16.20 except dim. "W"

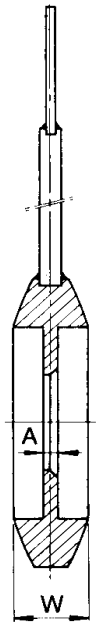

Fig. 3
Lens ring to DIN 2669
except dim. "W"

Ringnumbers as per ANSI B16.20					
Line	Size \ Class	300 600	900	1500	2500
2"	50	R23	R24	R24	R26
3"	80	R31	R31	R35	R32
4"	100	R37	R37	R39	R38
6"	150	R45	R45	R46	R47
8"	200	R49	R49	R50	R51
10"	250	R53	R53	R54	R55
12"	300	R57	R57	R58	R60
14"	350	R61	R62	R63	
16"	400	R65	R66	R67	
18"	450	R69	R70	R71	
20"	500	R73	R74	R75	
24"	600	R77	R78	R79	

Ring	A	P	W	Ring	A	P	W
R24	3	82.55	26.5	R57	6	381.00	26.5
R24	3	95.25	26.5	R58	6	381.00	36.5
R26	3	101.60	26.5	R60	6	406.40	44.0
R31	3	123.82	26.5	R61	9	419.10	32.0
R32	3	127.00	26.5	R62	9	419.10	35.0
R35	3	136.52	26.5	R63	9	419.10	43.0
R37	3	149.22	26.5	R65	9	469.90	32.0
R38	3	157.16	30.0	R66	9	469.90	35.0
R39	3	161.92	26.5	R67	9	469.90	47.0
R45	3	211.14	26.5	R69	12	533.40	35.0
R46	3	211.14	26.5	R70	12	533.40	42.0
R47	3	228.60	32.0	R71	12	533.40	50.0
R49	6	269.88	26.5	R73	12	584.20	36.5
R50	6	269.88	32.0	R74	12	584.20	42.0
R51	6	279.40	36.0	R75	12	584.20	51.0
R53	6	323.85	26.5	R77	16	692.15	44.0
R54	6	323.85	32.0	R78	16	692.15	50.0
R55	6	342.90	42.0	R79	16	692.15	57.0

FITTACKS

Carrier Rings

Execution : **Meets AGA, ASME, BS, DIN, ISO and all clients requirements.**

Plate types : **Square edge, quarter circle, conical entrance, concentric, eccentric and segmental.**

Options : **Flange taps, corner taps, ring chamber, integral.**
Drain- and/or venthole in orifice plate.
Computer calculations to any international standard.
Gaskets other than flat gaskets.

MSS-SP95

Swaged Nipples

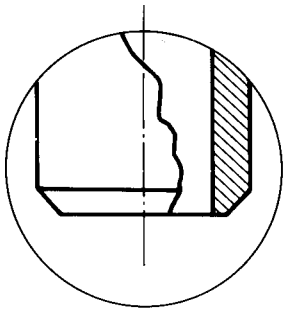

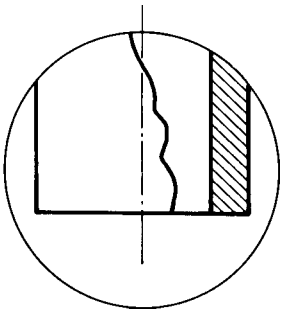

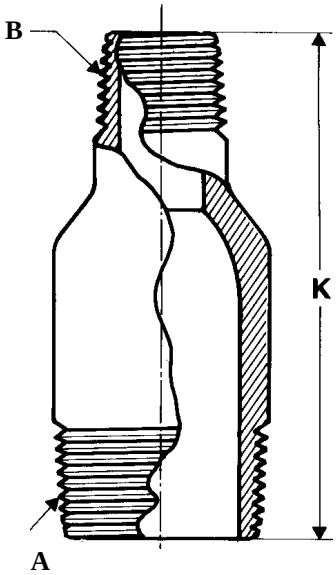

Nominal Pipe Sizes A x B	K mm	K inches	Thickness according to ANSI B 36.10		
3/8 x 1/4	**63.5**	2.50	Sch 40	Sch 80	-
1/2 x 3/8	**63.5**	2.75	Sch 40	Sch 80	-
1/2 x 1/4	**63.5**	2.75	Sch 40	Sch 80	-
3/4 x 1/2	**76.2**	3.00	Sch 40	Sch 80	Sch 160
3/4 x 3/8	**76.2**	3.00	Sch 40	Sch 80	-
1 x 3/4	**88.9**	3.50	Sch 40	Sch 80	Sch 160
1 x 1/2	**88.9**	3.50	Sch 40	Sch 80	Sch 160
1.1/4 x 1	**102.6**	4.00	Sch 40	Sch 80	Sch 160
1.1/2 x 1.1/4	**114.3**	4.50	Sch 40	Sch 80	Sch 160
1.1/2 x 1	**114.3**	4.50	Sch 40	Sch 80	Sch 160
1.1/2 x 3/4	**114.3**	4.50	Sch 40	Sch 80	Sch 160
2 x 1.1/2	**165.1**	6.50	Sch 40	Sch 80	Sch 160
2 x 1.1/4	**165.1**	6.50	Sch 40	Sch 80	Sch 160
2 x 1	**165.1**	6.50	Sch 40	Sch 80	Sch 160
2.1/2 x 2	**177.8**	7.00	Sch 40	Sch 80	Sch 160
3 x 2	**203.2**	8.00	Sch 40	Sch 80	Sch 160
4 x 3	**228.6**	9.00	Sch 40	Sch 80	Sch 160
4 x 2	**228.6**	9.00	Sch 40	Sch 80	Sch 160