FITTACKS

150 Lbs

Welding Neck
1/2" - 24"ANSI B 16.5
26" - 48" BS 3293

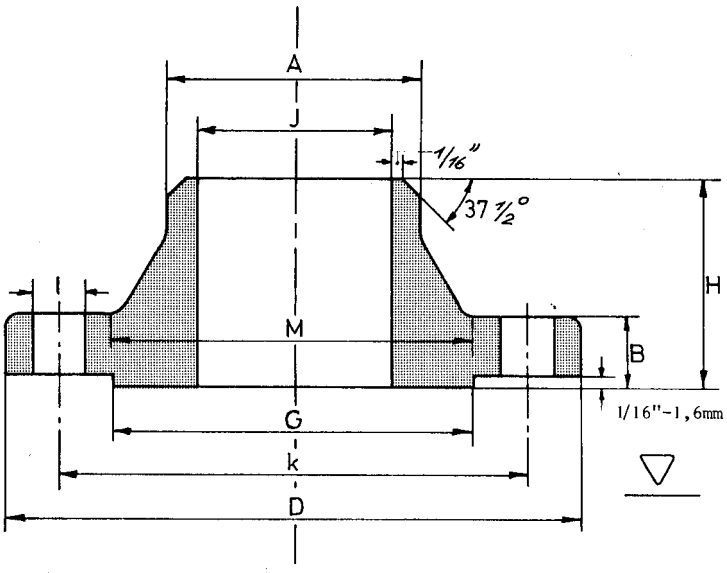

*** Diameter J to be specified.**

Nominal Pipe Size	mm	Outside Diam. D	Diam. of Bore J	Thick-ness Min. B	Length thru Hub H	Diam. Hub at Bevel A	Diam. at Base of Hub M	O.D. Raised Face G	Number of Holes	Diam of Holes I	Bolt Circle Diam. K.	Approx Weight Kg
1/2"	mm	88.9		11.2	47.8	21.3	30.2	35.1	4	15.7	60.5	0.5
3/4"	mm	98.6		12.7	52.3	26.7	38.1	42.9	4	15.7	69.9	0.7
1"	mm	108.0		14.2	55.6	33.5	49.3	50.8	4	15.7	79.2	1
1.1/4"	mm	117.3		15.7	57.2	42.2	58.7	63.5	4	15.7	88.9	1.4
1.1/2"	mm	127.0		17.5	62.0	48.3	65.0	73.2	4	15.7	98.6	1.8
2"	mm	152.4		19.1	63.5	60.5	77.7	91.9	4	19.1	120.7	2.6
2.1/2"	mm	177.8		22.4	69.9	73.2	90.4	104.6	4	19.1	139.7	4.2
3"	mm	190.5		23.9	69.9	88.9	108.0	127.0	4	19.1	152.4	5
3.1/2"	mm	215.9		23.9	71.4	101.6	122.2	139.7	8	19.1	177.8	6.1
4"	mm	228.6		23.9	76.2	114.3	134.9	157.2	8	19.1	190.5	7
5"	mm	254.0		23.9	88.9	141.2	163.6	185.7	8	22.4	215.9	8.6
6"	mm	279.4		25.4	88.9	168.4	192.0	215.9	8	22.4	241.3	10.6
8"	mm	342.9		28.4	101.6	219.2	246.1	269.7	8	22.4	298.5	17.6
10"	mm	406.4		30.2	101.6	273.1	304.8	323.8	12	25.4	362.0	24

FITTACKS

150 Lbs

Welding Neck
1/2" - 24"ANSI B 16.5
26" - 48" BS 3293

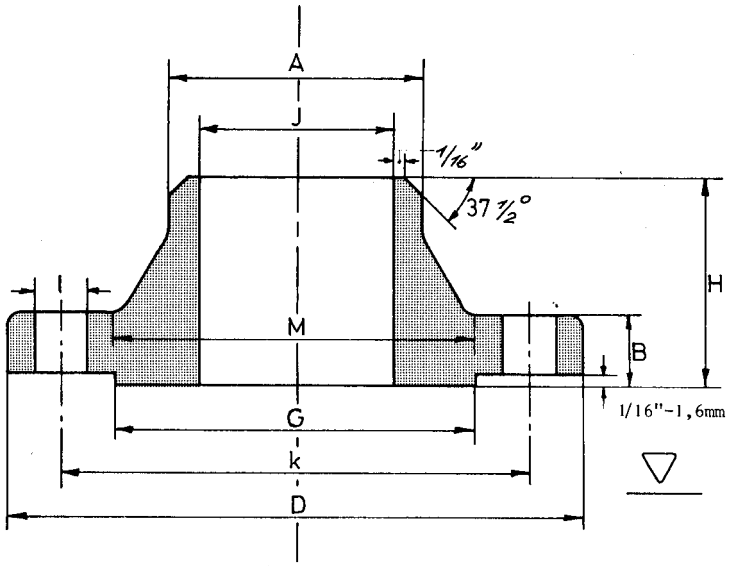

*** Diameter J to be specified.**

Nominal Pipe Size	mm	Outside Diam. D	Diam. of Bore J	Thick-ness Min. B	Length thru Hub H	Diam. Hub at Bevel A	Diam. at Base of Hub M	O.D. Raised Face G	Number of Holes	Diam of Holes I	Bolt Circle Diam. K.	Approx Weight Kg
12"	mm	482.6		31.8	114.3	323.9	365.3	381.0	12	25.4	431.8	37
14"	mm	533.4		35.1	127.0	355.6	400.1	412.8	12	28.4	476.3	49
16"	mm	596.9		36.6	127.0	406.4	457.2	469.9	16	28.4	539.8	61
18"	mm	635.0		39.6	139.7	457.2	505.0	533.4	16	31.8	577.9	68
20"	mm	698.5		42.9	144.5	508.0	558.8	584.2	20	31.8	635.0	85
22"	mm	749.3		46.0	149.2	558.8	609.6	641.2	20	35.1	692.1	102
24"	mm	812.8		47.8	152.4	609.6	663.4	692.2	20	35.1	749.3	115
26"	mm	869.9		50.8	127.0	660.4	723.9	742.9	24	34.9	806.4	118
28"	mm	927.1		52.4	128.6	711.2	781.0	793.7	28	34.9	863.6	134
30"	mm	984.2		54.0	130.2	762.0	831.8	857.2	28	34.9	914.4	153
32"	mm	1060.4		57.1	133.3	812.8	889.0	908.0	28	41.3	977.9	190
34"	mm	1111.2		58.7	134.9	863.6	939.8	958.8	32	41.3	1028.7	212
36"	mm	1168.4		60.3	136.5	914.4	996.9	1022.3	32	41.3	1085.8	242
38"	mm	1238.2		60.3	136.5	965.2	1060.4	1073.1	32	41.3	1149.3	284

FITTACKS

150 Lbs

Welding Neck
1/2" - 24"ANSI B 16.5
26" - 48" BS 3293

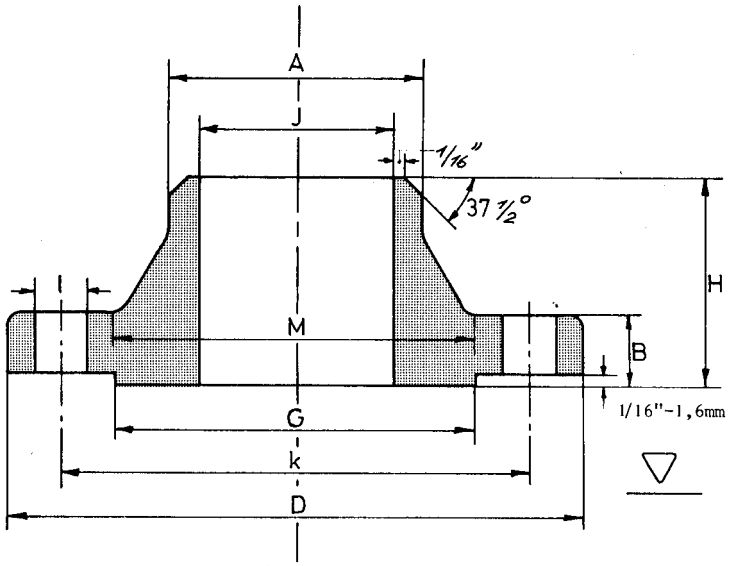

*** Diameter J to be specified.**

Nominal Pipe Size	mm	Outside Diam. D	Diam. of Bore J	Thick-ness Min. B	Length thru Hub H	Diam. Hub at Bevel A	Diam. at Base of Hub M	O.D. Raised Face G	Number of Holes	Diam of Holes I	Bolt Circle Diam. K.	Approx Weight Kg
40"	mm	1289.0		63.5	139.7	1016.0	1111.2	1123.9	36	41.3	1200.1	311
42"	mm	1346.2		66.7	142.9	1066.8	1168.4	1193.8	36	41.3	1257.3	358
44"	mm	1403.3		66.7	142.9	1117.6	1219.2	1244.6	40	41.3	1314.4	376
46"	mm	1454.1		68.3	144.5	1168.4	1270.0	1295.4	40	41.3	1365.2	399
48"	mm3	1511.1		69.8	146.0	1219.2	1327.1	1358.9	44	41.3	1422.4	440

FITTACKS

300 Lbs

Welding Neck
1/2" - 24"ANSI B 16.5
26" - 36" BS 3293

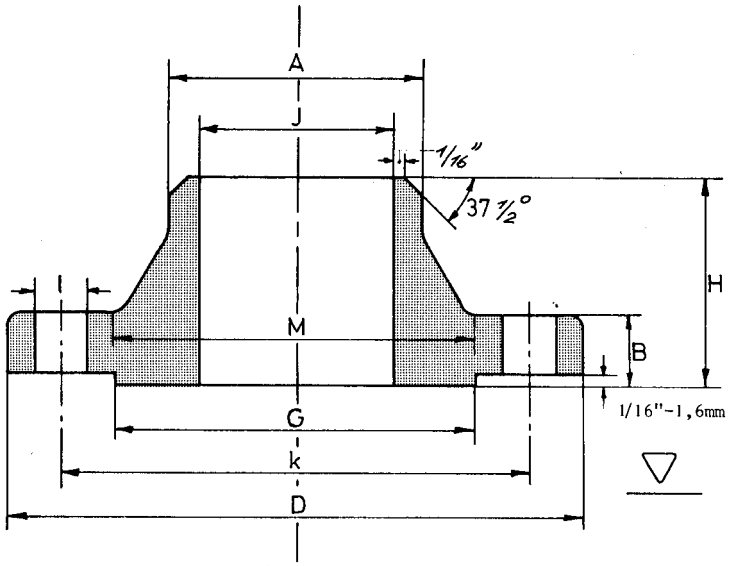

*** Diameter J to be specified.**

Nominal Pipe Size	mm	Outside Diam. D	Diam. of Bore J	Thick-ness Min. B	Length thru Hub H	Diam. Hub at Bevel A	Diam. at Base of Hub M	O.D. Raised Face G	Number of Holes	Diam of Holes I	Bolt Circle Diam. K.	Approx Weight Kg
1/2"	mm	95.2		14.2	52.3	21.3	38.1	35.0	4	15.7	66.5	0.8
3/4"	mm	117.3		15.7	57.1	26.7	47.7	42.9	4	19.0	82.5	1.3
1"	mm	123.9		17.5	62.0	33.5	53.8	50.8	4	19.0	88.9	1.6
1.1/4"	mm	133.3		19.0	65.0	42.2	63.5	63.5	4	19.0	98.5	2.1
1.1/2"	mm	155.4		20.6	68.3	48.3	69.8	73.1	4	22.3	114.3	3
2"	mm	165.1		22.3	69.8	60.4	84.0	91.9	8	19.0	127.0	3.4
2.1/2"	mm	190.5		25.4	76.2	73.1	100.0	104.6	8	22.3	149.3	5.2
3"	mm	209.5		28.4	79.2	88.9	117.3	127.0	8	22.3	168.1	7
3.1/2"	mm	228.6		30.2	81.0	101.6	133.3	139.7	8	22.3	184.1	8.7
4"	mm	254.0		31.8	85.8	114.3	146.0	157.2	8	22.3	200.1	11.2
5"	mm	279.4		35.0	98.5	141.2	177.8	185.6	8	22.3	234.9	16
6"	mm	317.5		36.5	98.5	168.4	206.2	215.9	12	22.3	269.7	20
8"	mm	381.0		41.1	111.2	219.2	260.3	269.7	12	25.4	330.2	30
10"	mm	444.5		47.7	117.3	273.0	320.5	323.8	16	28.6	387.3	43

FITTACKS

300 Lbs

Welding Neck
1/2" - 24"ANSI B 16.5
26" - 36" BS 3293

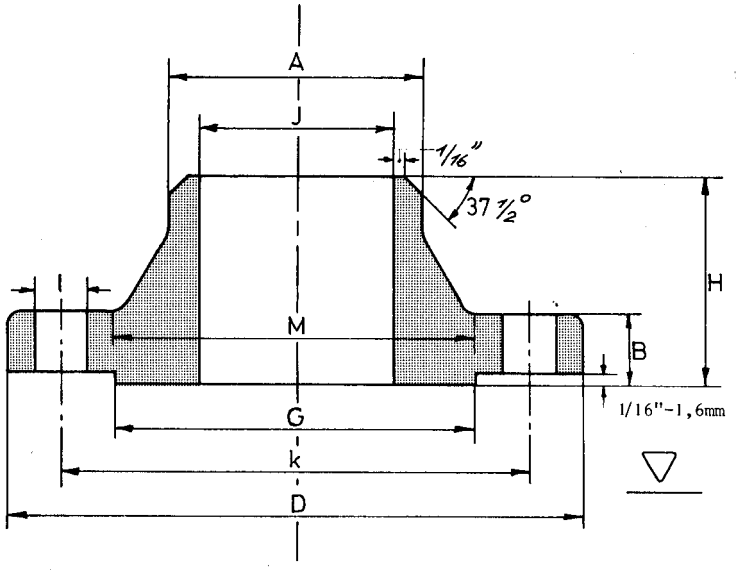

*** Diameter J to be specified.**

Nominal Pipe Size	mm	Outside Diam. D	Diam. of Bore J	Thick-ness Min. B	Length thru Hub H	Diam. Hub at Bevel A	Diam. at Base of Hub M	O.D. Raised Face G	Number of Holes	Diam of Holes I	Bolt Circle Diam. K.	Approx Weight Kg
12"	mm	520.7		50.8	130.0	323.8	374.6	381.0	16	31.7	450.8	62
14"	mm	584.2		53.8	142.7	355.6	425.4	412.7	20	31.7	514.3	86
16"	mm	647.7		57.1	146.0	406.4	482.6	469.9	20	35.0	571.5	106
18"	mm	711.2		60.4	158.7	457.2	533.4	533.4	24	35.0	628.6	131
20"	mm	774.7		63.5	162.0	508.0	587.2	584.2	24	35.0	685.8	158
22"	mm	838.2		66.7	165.1	558.8	641.2	641.2	24	41.1	742.9	195
24"	mm	914.4		69.8	168.1	609.6	701.5	692.1	24	41.1	812.8	230
26"	mm	971.5		79.4	184.1	666.7	720.7	749.3	28	44.4	876.3	279
28"	mm	1035.0		85.7	196.8	717.5	774.7	800.1	28	44.4	939.8	340
30"	mm	1092.2		92.1	209.5	768.3	827.1	857.2	28	47.6	996.9	390
32"	mm	1149.3		98.4	222.2	819.1	881.1	914.4	28	50.8	1054.1	435
34"	mm	1206.5		101.6	231.8	871.5	936.6	965.2	28	50.8	1104.9	504
36"	mm	1270.0		104.8	241.3	922.3	990.6	1022.3	32	54.0	1168.4	560

FITTACKS

600 Lbs

Welding Neck
1/2" - 24"ANSI B 16.5
26" - 36" BS 3293

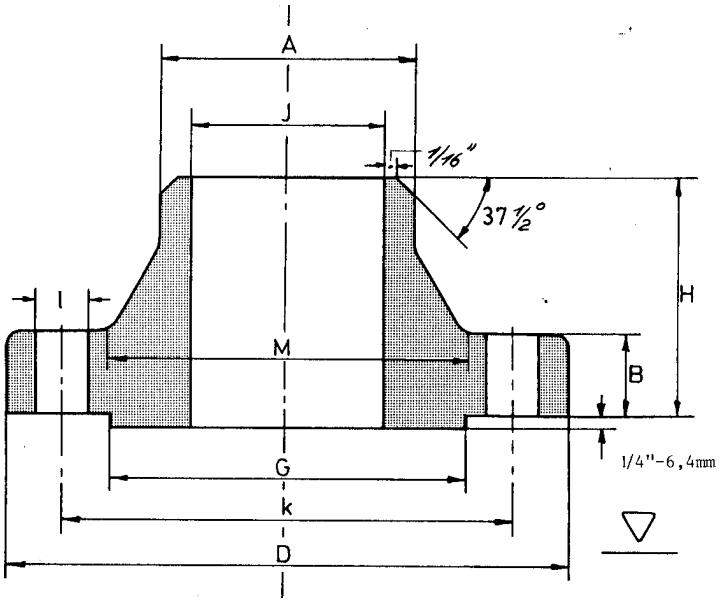

*** Diameter J to be specified.**

Nominal Pipe Size	mm	Outside Diam. D	Diam. of Bore J	Thick-ness Min. B	Length thru Hub H	Diam. Hub at Bevel A	Diam. at Base of Hub M	O.D. Raised Face G	Number of Holes	Diam of Holes I	Bolt Circle Diam. K.	Approx Weight Kg
1/2"	mm	95.3		14.2	52.3	21.3	38.1	34.9	4	15.7	66.5	0.9
3/4"	mm	117.3		15.7	57.2	26.7	47.8	42.9	4	19.1	82.6	1.5
1"	mm	124.0		17.5	62.0	33.5	53.8	50.8	4	19.1	88.9	1.8
1.1/4"	mm	133.4		20.6	66.5	42.2	63.5	63.5	4	19.1	98.6	2.5
1.1/2"	mm	155.4		22.4	69.9	48.3	69.9	73.0	4	22.4	114.3	3.5
2"	mm	165.1		25.4	73.2	60.5	84.1	92.1	8	19.1	127.0	4.4
2.1/2"	mm	190.5		28.4	79.2	73.2	100.1	104.8	8	22.4	149.4	6.4
3"	mm	209.6		31.8	82.6	88.9	117.3	127.0	8	22.4	168.1	8.6
3.1/2"	mm	228.6		35.1	85.9	101.6	133.4	139.7	8	25.4	184.2	11.7
4"	mm	273.1		38.1	101.6	114.3	152.4	157.2	8	25.4	215.9	18
5"	mm	330.2		44.5	114.3	141.2	189.0	185.7	8	28.4	266.7	30
6"	mm	355.6		47.8	117.3	168.4	222.3	215.9	12	28.4	292.1	35
8"	mm	419.1		55.6	133.4	219.2	273.1	269.9	12	31.8	349.3	54
10"	mm	508.0		63.5	152.4	273.1	342.9	323.8	16	35.1	431.8	87

FITTACKS

600 Lbs

Welding Neck
1/2" - 24"ANSI B 16.5
26" - 36" BS 3293

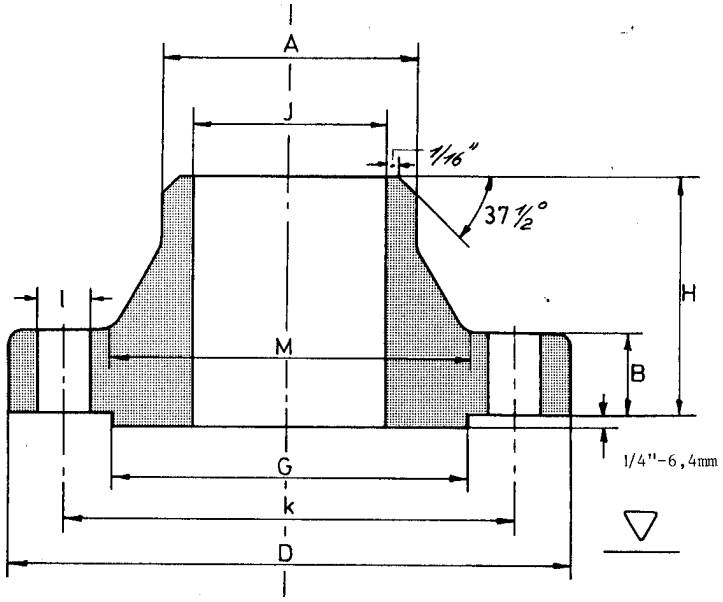

*** Diameter J to be specified.**

Nominal Pipe Size	mm	Outside Diam. D	Diam. of Bore J	Thick-ness Min. B	Length thru Hub H	Diam. Hub at Bevel A	Diam. at Base of Hub M	O.D. Raised Face G	Number of Holes	Diam of Holes I	Bolt Circle Diam. K.	Approx Weight Kg
12"	mm	558.8		66.5	155.4	323.9	400.1	381.0	20	35.1	489.0	103
14"	mm	603.3		69.9	165.1	355.6	431.8	412.8	20	38.1	527.1	122
16"	mm	685.8		76.2	177.8	406.4	495.3	469.9	20	41.1	603.3	170
18"	mm	743.0		82.6	184.2	457.2	546.1	533.4	20	44.5	654.1	204
20"	mm	812.8		88.9	190.5	508.0	609.6	584.2	24	44.5	723.9	254
22"	mm	869.9		95.2	196.8	558.8	666.7	641.2	24	47.6	777.9	281
24"	mm	939.8		101.6	203.2	609.6	717.6	692.2	24	50.8	838.2	358
26"	mm	1016.0		107.9	222.2	671.5	747.7	749.3	28	50.8	914.4	437
28"	mm	1073.1		111.1	234.9	723.9	803.3	800.1	28	54.0	965.2	508
30"	mm	1130.3		114.3	247.6	774.7	862.0	857.2	28	54.0	1022.3	559
32"	mm	1193.8		117.5	260.3	825.5	917.6	914.4	28	60.3	1079.5	680
34"	mm	1244.6		120.6	269.9	877.9	973.1	965.2	28	60.3	1130.3	717
36"	mm	1314.4		123.8	282.6	928.7	1031.9	1022.3	28	66.7	1193.8	780

FITTACKS

900 Lbs

Welding Neck
ANSI B 16.5

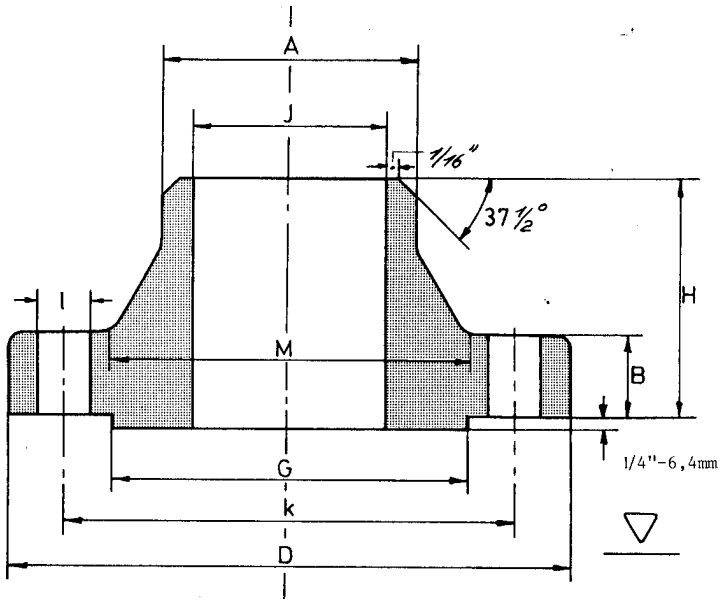

*** Diameter J to be specified.**

Nominal Pipe Size	mm	Outside Diam. D	Diam. of Bore J	Thick-ness Min. B	Length thru Hub H	Diam. Hub at Bevel A	Diam. at Base of Hub M	O.D. Raised Face G	Number of Holes	Diam of Holes I	Bolt Circle Diam. K.	Approx Weight Kg
1/2"	mm	120.6		22.3	60.4	21.3	38.1	35.0	4	22.3	82.5	2.3
3/4"	mm	130.2		25.4	69.8	26.7	44.4	42.9	4	22.3	88.9	2.7
1"	mm	149.3		28.4	73.1	33.4	52.3	50.8	4	25.4	101.6	4.1
1.1/4"	mm	158.7		28.4	73.1	42.2	63.5	63.5	4	25.4	111.2	4.5
1.1/2"	mm	177.8		31.7	82.5	48.3	69.8	73.1	4	28.4	123.9	5.9
2"	mm	215.9		38.1	101.6	60.3	104.6	91.9	8	25.4	165.1	11.3
2.1/2"	mm	244.3		41.1	104.6	73.0	123.9	104.6	8	28.4	190.5	16.3
3"	mm	241.3		38.1	101.6	88.9	127.0	127.0	8	25.4	190.5	14
4"	mm	292.1		44.4	114.3	114.3	158.7	157.2	8	31.7	234.9	23
5"	mm	349.2		50.8	127.0	141.2	190.5	185.6	8	35.0	279.4	38
6"	mm	381.0		55.6	139.7	168.4	234.9	215.9	12	31.7	317.5	48
8"	mm	469.9		63.5	162.0	219.2	298.4	269.7	12	38.1	393.7	82
10"	mm	546.1		69.8	184.1	273.0	368.3	323.8	16	38.1	469.9	119
12"	mm	609.6		79.2	200.1	323.8	419.1	381.0	20	38.1	533.4	157

FITTACKS

900 Lbs

Welding Neck
ANSI B 16.5

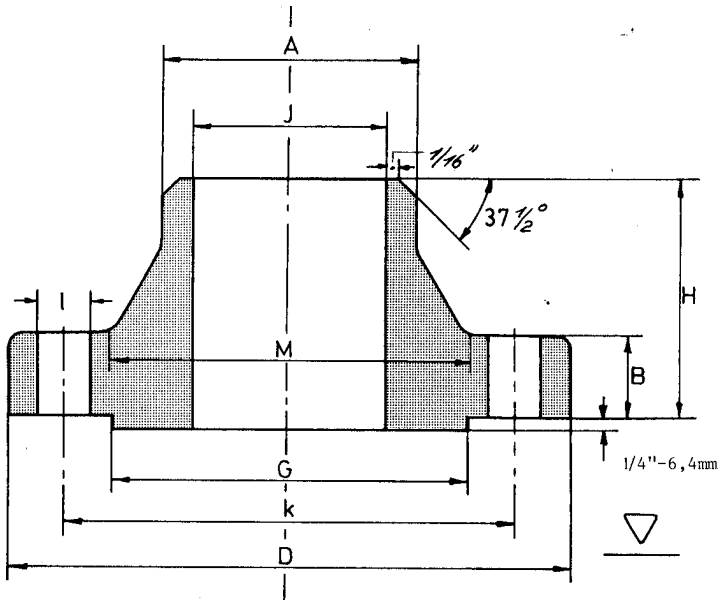

*** Diameter J to be specified.**

Nominal Pipe Size	mm	Outside Diam. D	Diam. of Bore J	Thick-ness Min. B	Length thru Hub H	Diam. Hub at Bevel A	Diam. at Base of Hub M	O.D. Raised Face G	Number of Holes	Diam of Holes I	Bolt Circle Diam. K.	Approx Weight Kg
14"	mm	641.3		85.8	212.8	355.6	450.8	412.7	20	41.1	558.8	180
16"	mm	704.8		88.9	215.9	406.4	508.0	469.9	20	44.4	615.9	217
18"	mm	787.4		101.6	228.6	457.2	565.1	533.4	20	50.8	685.8	298
20"	mm	857.2		107.9	247.6	508.0	622.3	584.2	20	53.8	749.3	362
24"	mm	1041.4		139.7	292.1	609.6	749.3	692.1	20	66.5	901.7	665

FITTACKS

1500 Lbs

Welding Neck
ANSI B 16.5

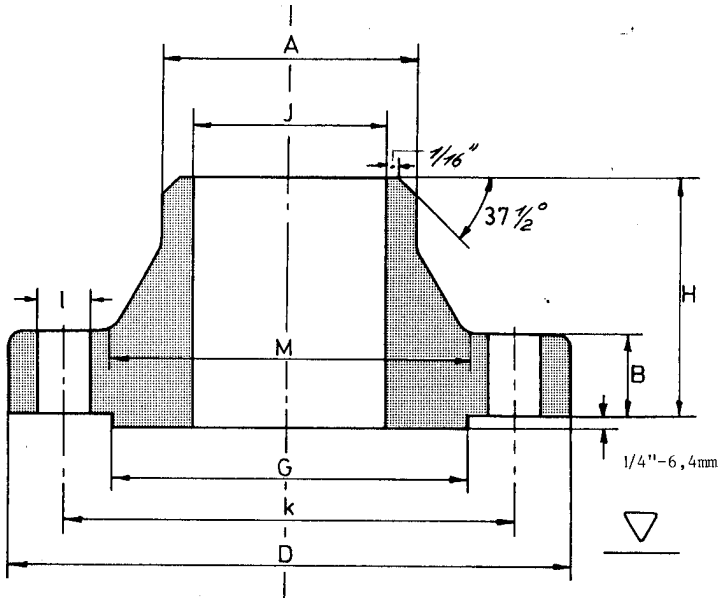

*** Diameter J to be specified.**

Nominal Pipe Size	mm	Outside Diam. D	Diam. of Bore J	Thick-ness Min. B	Length thru Hub H	Diam. Hub at Bevel A	Diam. at Base of Hub M	O.D. Raised Face G	Number of Holes	Diam of Holes I	Bolt Circle Diam. K.	Approx Weight Kg
1/2"	mm	120.6		22.3	60.4	21.3	38.1	35.0	4	22.3	82.5	2.3
3/4"	mm	130.2		25.4	69.8	26.7	44.4	42.9	4	22.3	88.9	2.7
1"	mm	149.3		28.4	73.1	33.4	52.3	50.8	4	25.4	101.6	4.1
1.1/4"	mm	158.7		28.4	73.1	42.2	63.5	63.5	4	25.4	111.2	4.5
1.1/2"	mm	177.8		31.7	82.5	48.3	69.8	73.1	4	28.4	123.9	5.9
2"	mm	215.9		38.1	101.6	60.3	104.6	91.9	8	25.4	165.1	11.3
2.1/2"	mm	244.3		41.1	104.6	73.0	123.9	104.6	8	28.4	190.5	16.3
3"	mm	266.7		47.7	117.3	88.9	133.3	127.0	8	31.7	203.2	21.8
4"	mm	311.1		53.8	123.9	114.3	162.0	157.2	8	35.0	241.3	33
5"	mm	374.6		73.1	155.4	141.2	196.8	185.6	8	41.1	292.1	59
6"	mm	393.7		82.5	171.4	168.4	228.6	215.9	12	38.1	317.5	75
8"	mm	482.6		91.9	212.8	219.2	292.1	269.7	12	44.4	393.7	125
10"	mm	584.2		107.9	254.0	273.0	368.3	323.8	12	50.8	482.6	206
12"	mm	673.1		123.9	282.4	323.8	450.8	381.0	16	53.8	571.5	313

FITTACKS

1500 Lbs

Welding Neck
ANSI B 16.5

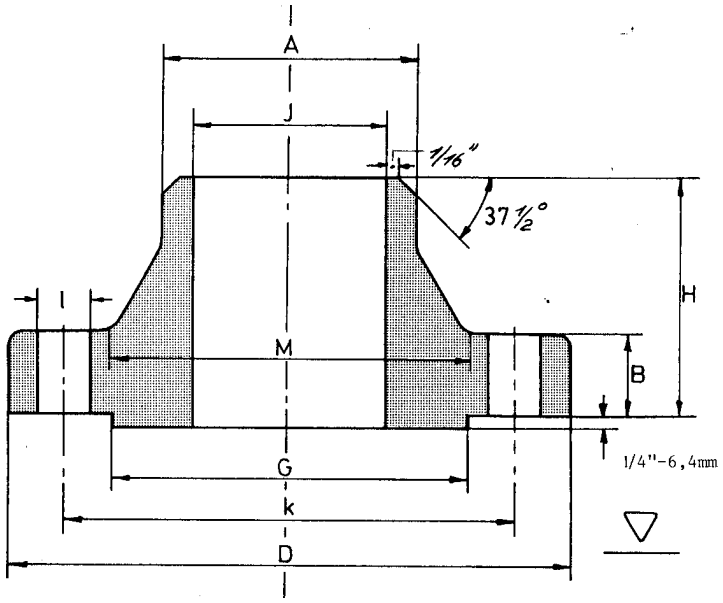

*** Diameter J to be specified.**

Nominal Pipe Size	mm	Outside Diam. D	Diam. of Bore J	Thick-ness Min. B	Length thru Hub H	Diam. Hub at Bevel A	Diam. at Base of Hub M	O.D. Raised Face G	Number of Holes	Diam of Holes I	Bolt Circle Diam. K.	Approx Weight Kg
14"	mm	749.3		133.3	298.4	355.6	495.3	412.7	16	60.4	635.0	380
16"	mm	825.5		146.0	311.1	406.4	552.4	469.9	16	66.5	704.8	485
18"	mm	914.4		162.0	327.1	457.2	596.9	533.4	16	73.1	774.7	644
20"	mm	984.2		177.8	355.6	508.0	641.3	584.2	16	79.2	831.8	775
24"	mm	1168.4		203.2	406.4	609.6	762.0	692.1	16	91.9	990.6	1232

FITTACKS

2500 Lbs

Welding Neck
ANSI B 16.5

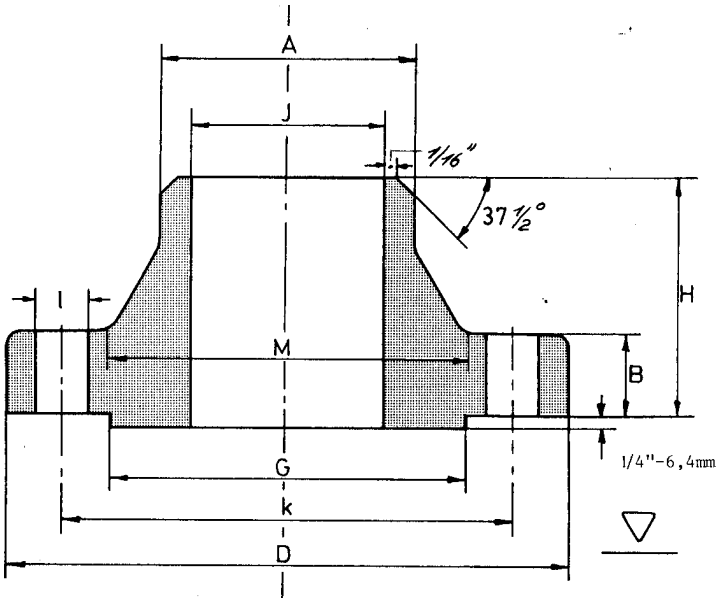

*** Diameter J to be specified.**

Nominal Pipe Size	mm	Outside Diam. D	Diam. of Bore J	Thick-ness Min. B	Length thru Hub H	Diam. Hub at Bevel A	Diam. at Base of Hub M	O.D. Raised Face G	Number of Holes	Diam of Holes I	Bolt Circle Diam. K.	Approx Weight Kg
1/2"	mm	133.4		30.2	73.2	21.3	42.9	35.1	4	22.4	88.9	3.2
3/4"	mm	139.7		31.8	79.2	26.7	50.8	42.9	4	22.4	95.3	3.7
1"	mm	158.8		35.1	88.9	33.5	57.2	50.8	4	25.4	108.0	5.3
1.1/4"	mm	184.2		38.1	95.3	42.2	73.2	63.5	4	28.4	130.0	7.8
1.1/2"	mm	203.2		44.5	111.3	48.3	79.2	73.2	4	31.8	146.1	11
2"	mm	235.0		50.8	127.0	60.5	95.3	91.9	8	28.4	171.5	17
2.1/2"	mm	266.7		57.2	142.7	73.2	114.3	104.6	8	31.8	196.9	24
3"	mm	304.8		66.5	168.1	88.9	133.4	127.0	8	35.1	228.6	37
4"	mm	355.6		76.2	190.5	114.3	165.1	157.2	8	41.1	273.1	56
5"	mm	419.1		91.9	228.6	141.2	203.2	185.7	8	47.8	323.9	93
6"	mm	482.6		108.0	273.1	168.4	235.0	215.9	8	53.8	368.3	143
8"	mm	552.5		127.0	317.5	219.2	304.8	269.7	12	53.8	438.2	215
10"	mm	673.1		165.1	419.1	273.0	374.7	323.9	12	66.5	539.8	406
12"	mm	762.0		184.2	463.6	323.9	441.5	381.0	12	73.2	619.3	572

FITTACKS

150 Lbs

Slip On Flanges
1/2" - 24"ANSI B 16.5
26" - 48" BS 3293

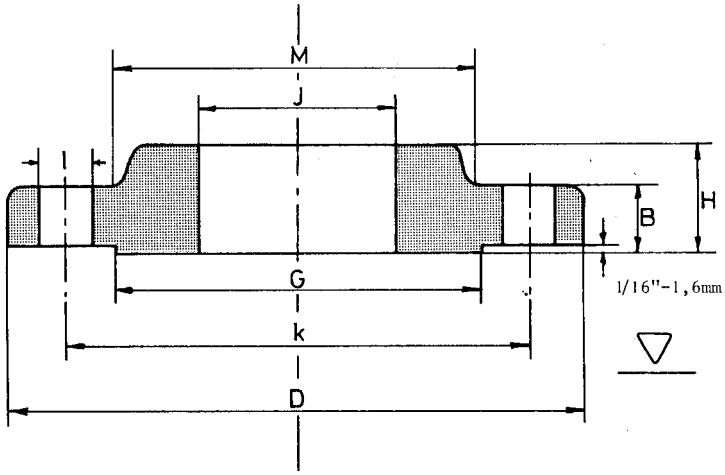

Nominal Pipe Size	mm	Outside Diam. D	Diam. of Bore J	Thick-ness Min. B	Length thru Hub H		Diam. at Base of Hub M	O.D. of Raised Face G	Number of Holes	Diam of Holes I	Bolt Circle Diam. K	Approx Weight Kg
1/2"	mm	88.9	22.4	11.2	15.7		30.2	35.1	4	15.7	60.5	0.4
3/4"	mm	98.6	27.7	12.7	15.7		38.1	42.9	4	15.7	69.9	0.6
1"	mm	108.0	34.5	14.2	17.5		49.3	50.8	4	15.7	79.2	0.8
1.1/4"	mm	117.3	43.2	15.7	20.6		58.7	63.5	4	15.7	88.9	1
1.1/2"	mm	127.0	49.5	17.5	22.4		65.0	73.2	4	15.7	98.6	1.4
2"	mm	152.4	62.0	19.1	25.4		77.7	91.9	4	19.1	120.7	2.1
2.1/2"	mm	177.8	74.7	22.4	28.4		90.4	104.6	4	19.1	139.7	3.3
3"	mm	190.5	90.7	23.9	30.2		108.0	127.0	4	19.1	152.4	3.9
3.1/2"	mm	215.9	103.4	23.9	31.8		122.2	139.7	8	19.1	177.8	4.9
4"	mm	228.6	116.1	23.9	33.3		134.9	157.2	8	19.1	190.5	5.4
5"	mm	254.0	143.8	23.9	36.6		163.6	185.7	8	22.4	215.9	6.1
6"	mm	279.4	170.7	25.4	39.6		192.0	215.9	8	22.4	241.3	7.5
8"	mm	342.9	221.5	28.4	44.5		246.1	269.7	8	22.4	298.5	12.1
10"	mm	406.4	276.4	30.2	49.3		304.8	323.9	12	25.4	362.0	16.5

FITTACKS

150 Lbs

Slip On Flanges
1/2" - 24"ANSI B 16.5
26" - 48" BS 3293

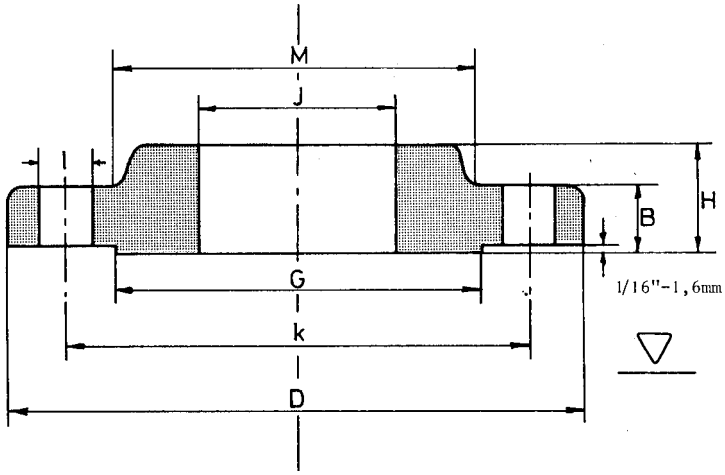

Nominal Pipe Size	mm	Outside Diam. D	Diam. of Bore J	Thick-ness Min. B	Length thru Hub H		Diam. at Base of Hub M	O.D. of Raised Face G	Number of Holes	Diam of Holes I	Bolt Circle Diam. K	Approx Weight Kg
12"	mm	482.6	327.2	31.8	55.6		365.3	381.0	12	25.4	431.8	27
14"	mm	533.4	359.2	35.1	57.2		400.1	412.8	12	28.4	476.2	35
16"	mm	596.9	410.5	36.6	63.5		457.2	469.9	16	28.4	539.8	45
18"	mm	635.0	461.8	39.6	68.3		505.0	533.4	16	31.8	577.9	49
20"	mm	698.5	513.1	42.9	73.2		558.8	584.2	20	31.8	635.0	62
22"	mm	749.3	564.4	46.0	79.4		609.6	641.2	20	35.1	692.1	85
24"	mm	812.8	616.0	47.8	82.6		663.4	692.2	20	35.1	749.3	87
26"	mm	869.9	666.7	50.8	85.7		723.9	742.9	24	34.9	806.4	107
28"	mm	927.1	717.6	52.4	87.3		781.0	793.7	28	34.9	863.6	122
30"	mm	984.2	768.3	54.0	88.9		831.8	857.2	28	34.9	914.4	138
32"	mm	1060.4	819.1	57.1	92.1		889.0	908.0	28	41.3	977.9	170
34"	mm	1111.2	869.9	58.7	93.7		939.8	958.8	32	41.3	1028.7	184
36"	mm	1168.4	920.7	60.3	95.2		996.9	1022.3	32	41.3	1085.8	211
38"	mm	1238.2	971.5	60.3	95.2		1060.4	1073.1	32	41.3	1149.3	249

FITTACKS

150 Lbs

Slip On Flanges
1/2" - 24"ANSI B 16.5
26" - 48" BS 3293

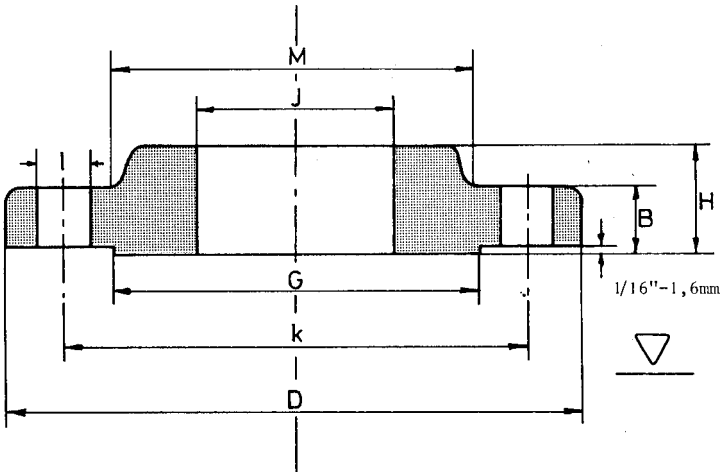

Nominal Pipe Size	mm	Outside Diam. D	Diam. of Bore J	Thick-ness Min. B	Length thru Hub H		Diam. at Base of Hub M	O.D. of Raised Face G	Number of Holes	Diam of Holes I	Bolt Circle Diam. K	Approx Weight Kg
40"	mm	1289.0	1022.3	63.5	98.4		1111.2	1123.9	36	41.3	1200.1	272
42"	mm	1346.2	1073.1	66.7	101.6		1168.4	1193.8	36	41.3	1257.3	313
44"	mm	1403.3	1123.9	66.7	101.6		1219.2	1244.6	40	41.3	1314.4	331
46"	mm	1454.1	1174.7	68.3	103.2		1270.0	1295.4	40	41.3	1365.2	349
48"	mm	1511.1	1225.5	69.8	104.8		1327.1	1358.9	44	41.3	1422.4	381

FITTACKS

300 Lbs

Slip On Flanges
1/2" - 24"ANSI B 16.5
26" - 36" BS 3293

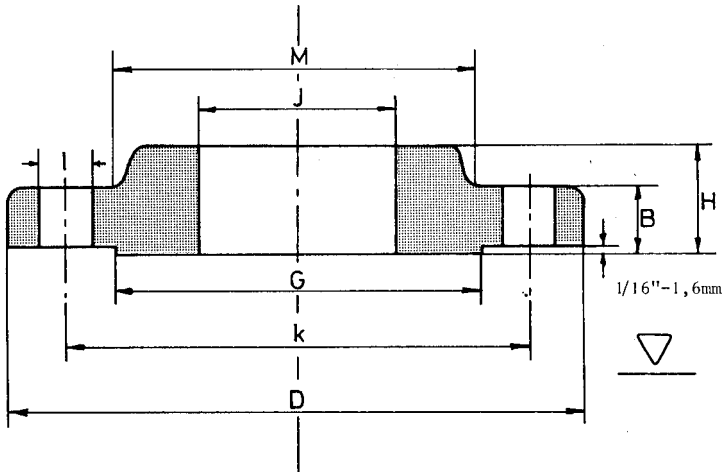

Nominal Pipe Size	mm	Outside Diam. D	Diam. of Bore J	Thick-ness Min. B	Length thru Hub H		Diam. at Base of Hub M	O.D. of Raised Face G	Number of Holes	Diam of Holes I	Bolt Circle Diam. K	Approx Weight Kg
1/2"	mm	95.2	22.3	14.2	22.3		38.1	35.0	4	15.7	66.5	0.7
3/4"	mm	117.3	27.7	15.7	25.4		47.7	42.9	4	19.0	82.5	1.2
1"	mm	123.9	34.5	17.5	26.9		53.8	50.8	4	19.0	88.9	1.4
1.1/4"	mm	133.3	43.2	19.0	26.9		63.5	63.5	4	19.0	98.5	1.7
1.1/2"	mm	155.4	49.5	20.6	30.2		69.8	73.1	4	22.3	114.3	2.5
2"	mm	165.1	62.0	22.3	33.2		84.0	91.9	8	19.0	127.0	2.9
2.1/2"	mm	190.5	74.7	25.4	38.1		100.0	104.6	8	22.3	149.3	4.4
3"	mm	209.5	90.7	28.4	42.9		117.3	127.0	8	22.3	168.1	5.6
3.1/2"	mm	228.6	103.4	30.2	44.4		133.3	139.7	8	22.3	184.1	7.4
4"	mm	254.0	116.1	31.7	47.7		146.0	157.2	8	22.3	200.1	10
5"	mm	279.4	143.8	35.0	50.8		177.8	185.6	8	22.3	234.9	12.3
6"	mm	317.5	170.7	36.5	52.3		206.2	215.9	12	22.3	269.7	15.6
8"	mm	381.0	221.5	41.1	61.9		260.3	269.7	12	25.4	330.2	24.2
10"	mm	444.5	276.3	47.7	66.5		320.5	323.8	16	28.4	387.3	34.1

FITTACKS

300 Lbs

Slip On Flanges
1/2" - 24"ANSI B 16.5
26" - 36" BS 3293

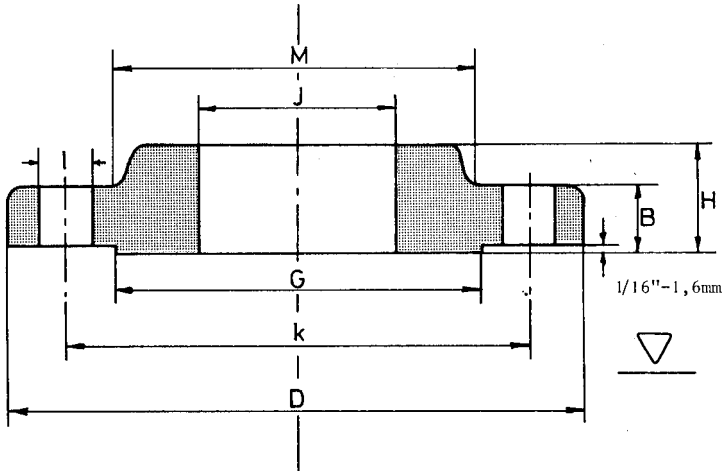

Nominal Pipe Size	mm	Outside Diam. D	Diam. of Bore J	Thick-ness Min. B	Length thru Hub H		Diam. at Base of Hub M	O.D. of Raised Face G	Number of Holes	Diam of Holes I	Bolt Circle Diam. K	Approx Weight Kg
12"	mm	520.7	327.1	50.8	73.1		374.6	381.0	16	31.7	450.8	50
14"	mm	584.2	359.1	53.8	76.2		425.4	412.7	20	31.7	514.3	70
16"	mm	647.7	410.5	57.1	82.5		482.6	469.9	20	35.0	571.5	89
18"	mm	711.2	461.8	60.4	88.9		533.4	533.4	24	35.0	628.6	109
20"	mm	774.7	513.1	63.5	95.2		587.2	584.2	24	35.0	685.8	134
22"	mm	838.2	564.4	66.7	101.6		641.2	641.2	24	41.1	742.9	168
24"	mm	914.4	615.9	69.8	106.4		701.5	692.1	24	41.1	812.8	201
26"	mm	971.5	666.7	79.4	184.1		720.7	749.3	28	44.4	876.3	285
28"	mm	1035.0	717.6	85.7	196.8		774.7	800.1	28	44.4	939.8	327
30"	mm	1092.2	768.3	92.1	209.5		827.1	857.2	28	47.6	996.9	367
32"	mm	1149.3	819.1	98.4	222.2		881.1	914.4	28	50.8	1054.1	404
34"	mm	1206.5	869.9	101.6	231.8		936.6	965.2	28	50.8	1104.9	488
36"	mm	1270.0	920.7	104.8	241.3		990.6	1022.3	32	54.0	1168.4	544

FITTACKS

600 Lbs

Slip On Flanges
1/2" - 24"ANSI B 16.5
26" - 36" BS 3293

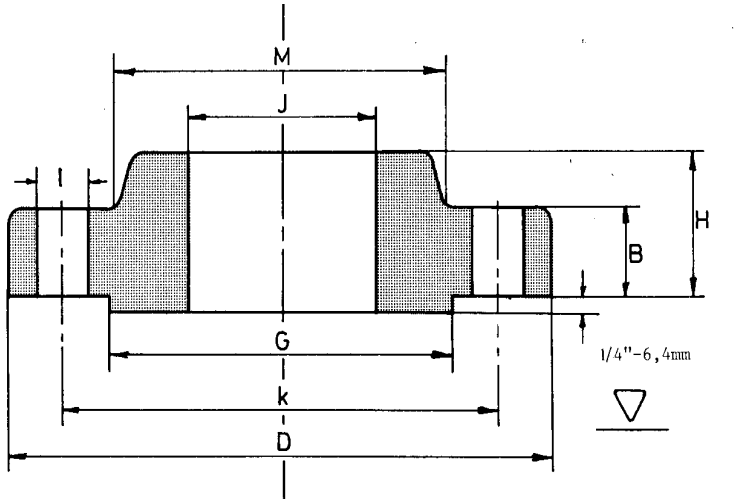

Nominal Pipe Size	mm	Outside Diam. D	Diam. of Bore J	Thick-ness Min. B	Length thru Hub H		Diam. at Base of Hub M	O.D. of Raised Face G	Number of Holes	Diam of Holes I	Bolt Circle Diam. K	Approx Weight Kg
1/2"	mm	95.3	22.4	14.2	22.4		38.1	35.1	4	15.7	66.5	0.8
3/4"	mm	117.3	27.7	15.7	25.4		47.8	42.9	4	19.1	82.6	1.3
1"	mm	124.0	34.5	17.5	26.9		53.8	50.8	4	19.1	88.9	1.6
1.1/4"	mm	133.4	43.2	20.6	28.4		63.5	63.5	4	19.1	98.6	2.1
1.1/2"	mm	155.4	49.5	22.4	31.8		69.9	73.2	4	22.4	114.3	3
2"	mm	165.1	62.0	25.4	36.6		84.1	91.9	8	19.1	127.0	3.6
2.1/2"	mm	190.5	74.7	28.4	41.1		100.1	104.6	8	22.4	149.4	5.3
3"	mm	209.6	90.7	31.8	46.0		117.3	127.0	8	22.4	168.1	7
3.1/2"	mm	228.6	103.4	35.1	49.3		133.4	139.7	8	25.4	184.2	9
4"	mm	273.1	116.1	38.1	53.8		152.4	157.2	8	25.4	215.9	14.5
5"	mm	330.2	143.8	44.5	60.5		189.0	185.7	8	28.4	266.7	25
6"	mm	355.6	170.7	47.8	66.5		222.3	215.9	12	28.4	292.1	29
8"	mm	419.1	221.5	55.6	76.2		273.1	269.7	12	31.8	349.3	44
10"	mm	508.0	276.4	63.5	85.9		342.9	323.9	16	35.1	431.8	71

FITTACKS

600 Lbs

Slip On Flanges
1/2" - 24"ANSI B 16.5
26" - 36" BS 3293

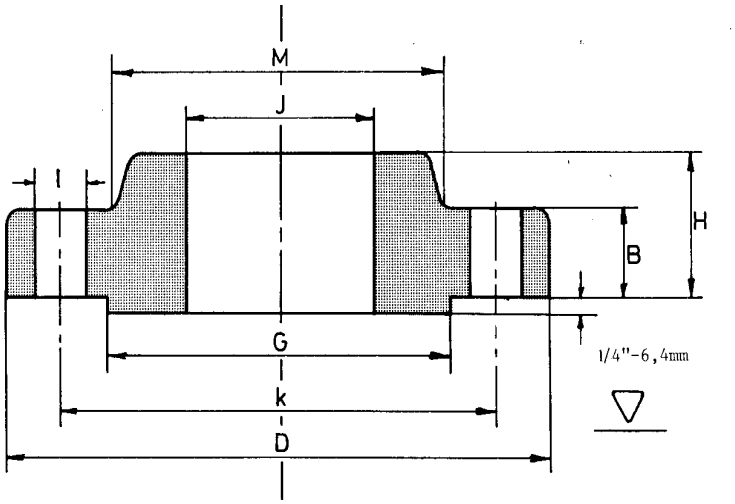

Nominal Pipe Size	mm	Outside Diam. D	Diam. of Bore J	Thick-ness Min. B	Length thru Hub H		Diam. at Base of Hub M	O.D. of Raised Face G	Number of Holes	Diam of Holes I	Bolt Circle Diam. K	Approx Weight Kg
12"	mm	558.8	327.2	66.5	91.9		400.1	381.0	20	35.1	489.0	85
14"	mm	603.3	359.2	69.9	93.7		431.8	412.8	20	38.1	527.1	99
16"	mm	685.8	410.5	76.2	106.4		495.3	469.9	20	41.1	603.3	142
18"	mm	743.0	461.8	82.6	117.3		546.1	533.4	20	44.5	654.1	173
20"	mm	812.8	513.1	88.9	127.0		609.6	584.2	24	44.5	723.9	220
22"	mm	869.9	564.4	95.2	133.3		666.7	641.2	24	47.6	777.9	300
24"	mm	939.8	616.0	101.6	139.7		717.6	692.2	24	50.8	838.2	312
26"	mm	1016.0	666.7	107.9	222.2		747.7	742.9	28	50.8	914.4	432
28"	mm	1073.1	717.6	111.1	234.9		803.3	793.7	28	54.0	965.2	488
30"	mm	1130.3	768.3	114.3	247.6		862.0	857.2	28	54.0	1022.3	533
32"	mm	1193.8	819.1	117.5	260.3		917.6	908.0	28	60.3	1079.5	624
34"	mm	1244.6	869.9	120.6	269.9		973.1	958.8	28	60.3	1130.3	681
36"	mm	1314.4	920.71	123.8	282.6		1031.9	1022.3	28	66.7	1193.8	726

FITTACKS

900 Lbs

Slip On Flanges
ANSI B 16.5

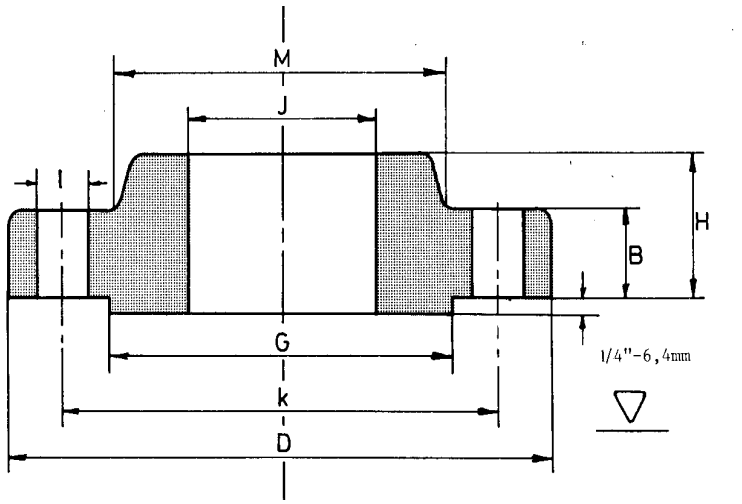

Nominal Pipe Size	mm	Outside Diam. D	Diam. of Bore J	Thick-ness Min. B	Length thru Hub H		Diam. at Base of Hub M	O.D. of Raised Face G	Number of Holes	Diam of Holes I	Bolt Circle Diam. K	Approx Weight Kg
1/2"	mm	120.6	22.3	22.3	31.7		38.1	35.0	4	22.3	82.5	1.8
3/4"	mm	130.0	27.7	25.4	35.0		44.4	42.9	4	22.3	88.9	2.4
1"	mm	149.3	34.5	28.4	41.1		52.3	50.8	4	25.4	101.6	3.5
1.1/4"	mm	158.7	43.2	28.4	41.1		63.5	63.5	4	25.4	111.2	4.0
1.1/2"	mm	177.8	49.5	31.7	44.5		69.8	73.1	4	28.4	123.9	5.4
2"	mm	215.9	62.0	38.1	57.1		104.6	91.9	8	25.4	165.1	10
2.1/2"	mm	244.3	74.7	41.1	63.5		123.9	104.6	8	28.4	190.5	14
3"	mm	241.3	90.7	38.1	53.8		127.0	127.0	8	25.4	190.5	12
4"	mm	292.1	116.1	44.4	69.8		158.7	157.2	8	31.7	234.9	20
5"	mm	349.2	143.8	50.8	79.2		190.5	185.6	8	35.0	279.4	32
6"	mm	381.0	170.7	55.6	85.8		234.9	215.9	12	31.7	317.5	42
8"	mm	469.9	221.5	63.5	101.6		298.4	269.7	12	38.1	393.7	71
10"	mm	546.1	276.3	69.8	107.9		368.3	323.8	16	38.1	469.9	101
12"	mm	609.6	327.1	79.2	117.3		419.1	381.0	20	38.1	533.4	133

FITTACKS

600 Lbs

Slip On Flanges
1/2" - 24"ANSI B 16.5
26" - 36" BS 3293

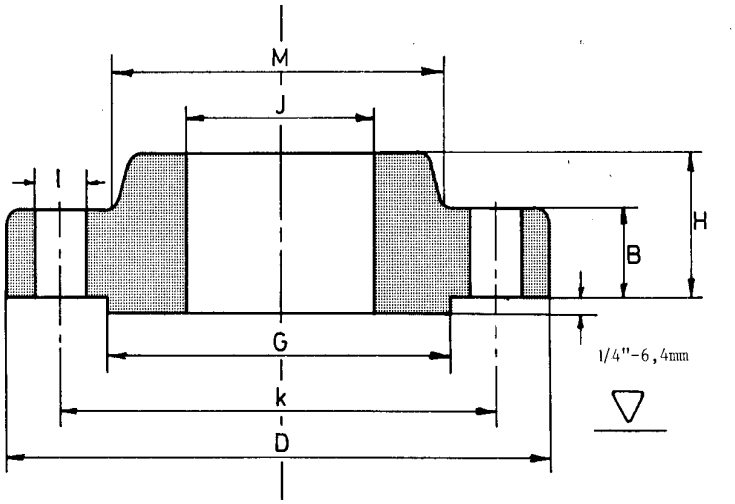

Nominal Pipe Size	mm	Outside Diam. D	Diam. of Bore J	Thick-ness Min. B	Length thru Hub H		Diam. at Base of Hub M	O.D. of Raised Face G	Number of Holes	Diam of Holes I	Bolt Circle Diam. K	Approx Weight Kg
12"	mm	558.8	327.2	66.5	91.9		400.1	381.0	20	35.1	489.0	85
14"	mm	603.3	359.2	69.9	93.7		431.8	412.8	20	38.1	527.1	99
16"	mm	685.8	410.5	76.2	106.4		495.3	469.9	20	41.1	603.3	142
18"	mm	743.0	461.8	82.6	117.3		546.1	533.4	20	44.5	654.1	173
20"	mm	812.8	513.1	88.9	127.0		609.6	584.2	24	44.5	723.9	220
22"	mm	869.9	564.4	95.2	133.3		666.7	641.2	24	47.6	777.9	300
24"	mm	939.8	616.0	101.6	139.7		717.6	692.2	24	50.8	838.2	312
26"	mm	1016.0	666.7	107.9	222.2		747.7	742.9	28	50.8	914.4	432
28"	mm	1073.1	717.6	111.1	234.9		803.3	793.7	28	54.0	965.2	488
30"	mm	1130.3	768.3	114.3	247.6		862.0	857.2	28	54.0	1022.3	533
32"	mm	1193.8	819.1	117.5	260.3		917.6	908.0	28	60.3	1079.5	624
34"	mm	1244.6	869.9	120.6	269.9		973.1	958.8	28	60.3	1130.3	681
36"	mm	1314.4	920.7	123.8	282.6		1031.9	1022.3	28	66.7	1193.8	726

FITTACKS

1500 Lbs

Slip On Flanges
ANSI B 16.5

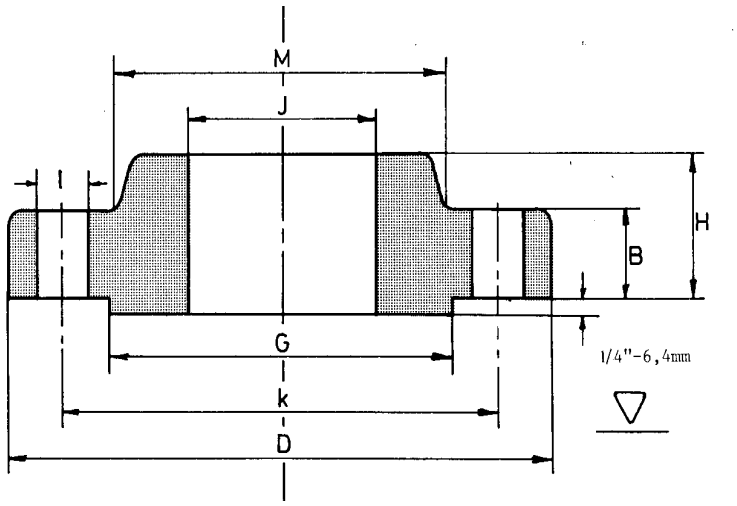

Nominal Pipe Size	mm	Outside Diam. D	Diam. of Bore J	Thick-ness Min. B	Length thru Hub H		Diam. at Base of Hub M	O.D. of Raised Face G	Number of Holes	Diam of Holes I	Bolt Circle Diam. K	Approx Weight Kg
1/2"	mm	120.6	22.3	22.3	31.7		38.1	35.0	4	22.3	82.5	1.8
3/4"	mm	130.0	27.7	25.4	35.0		44.4	42.9	4	22.3	88.9	2.4
1"	mm	149.3	34.5	28.4	41.1		52.3	50.8	4	25.4	101.6	3.5
1.1/4"	mm	158.7	43.2	28.4	41.1		63.5	63.5	4	25.4	111.2	4.0
1.1/2"	mm	177.8	49.5	31.7	44.5		69.8	73.1	4	28.4	123.9	5.4
2"	mm	215.9	62.0	38.1	57.1		104.6	91.9	8	25.4	165.1	10
2.1/2"	mm	244.3	74.7	41.1	63.5		123.9	104.6	8	28.4	190.5	14
3"	mm	266.7	90.7	47.7	73.1		133.3	127.0	8	31.7	203.2	21.5
4"	mm	311.1	116.1	53.8	90.5		162.0	157.2	8	35.0	241.3	33.2
5"	mm	374.6	143.8	73.1	104.8		196.8	185.6	8	41.1	292.1	60.8
6"	mm	393.7	170.7	82.5	119.1		228.6	215.9	12	38.1	317.5	74.8
8"	mm	482.6	221.5	91.9	142.9		292.1	269.7	12	44.4	393.7	118
10"	mm	584.2	276.3	107.9	158.7		368.3	323.8	12	50.8	482.6	197
12"	mm	673.1	327.12	123.9	181.0		450.8	381.0	16	53.8	571.5	264

FITTACKS

1500 Lbs

Slip On Flanges
ANSI B 16.5

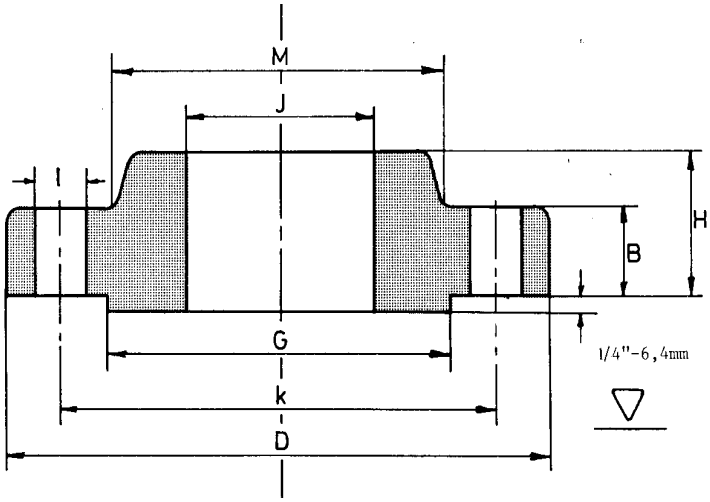

* = not specified

Nominal Pipe Size	mm	Outside Diam. D	Diam. of Bore J	Thick-ness Min. B	Length thru Hub H		Diam. at Base of Hub M	O.D. of Raised Face G	Number of Holes	Diam of Holes I	Bolt Circle Diam. K	Approx Weight Kg
14"	mm	749.3	359.1	133.3	241.3*		495.3	412.7	16	60.4	635.0	404*
16"	mm	825.5	410.5	146.0	260.3*		552.4	469.9	16	66.5	704.8	522*
18"	mm	914.4	461.8	162.0	276.2*		596.9	533.4	16	73.1	774.7	669*
20"	mm	984.2	513.1	177.8	292.1*		641.3	584.2	16	79.2	831.8	805*
24"	mm	1168.4	615.9	203.2	330.2*		762.0	692.1	16	91.9	990.6	1326*

FITTACKS

2500 Lbs

Slip On Flanges
ANSI B 16.5

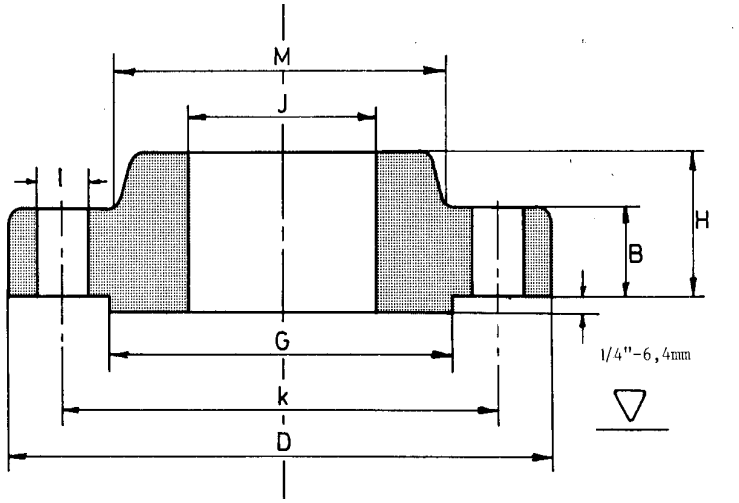

Nominal Pipe Size	mm	Outside Diam. D	Diam. of Bore J	Thick-ness Min. B	Length thru Hub H		Diam. at Base of Hub M	O.D. of Raised Face G	Number of Holes	Diam of Holes I	Bolt Circle Diam. K	Approx Weight Kg
1/2"	mm	133.4	22.3	30.2	39.7		42.9	35.1	4	22.4	88.9	3.0
3/4"	mm	139.7	27.7	31.8	42.9		50.8	42.9	4	22.4	95.3	3.6
1"	mm	158.8	34.5	35.1	47.6		57.2	50.8	4	25.4	108.0	5.0
1.1/4"	mm	184.2	43.2	38.1	52.4		73.2	63.5	4	28.4	130.0	7.2
1.1/2"	mm	203.2	49.5	44.5	60.3		79.2	73.2	4	31.8	146.1	10.0
2"	mm	235.0	62.0	50.8	69.8		95.3	91.9	8	28.4	171.5	17.0
2.1/2"	mm	266.7	74.7	57.2	79.4		114.3	104.6	8	31.8	196.9	25.0
3"	mm	304.8	90.7	66.5	92.1		133.4	127.0	8	35.1	228.6	38.0
4"	mm	355.6	116.1	76.2	107.9		165.1	157.2	8	41.1	273.1	56.0
5"	mm	419.1	143.8	91.9	130.2		203.2	185.7	8	47.8	323.9	95.0
6"	mm	482.6	170.7	108.0	152.4		235.0	215.9	8	53.8	368.3	147.0
8"	mm	552.5	221.5	127.0	177.8		304.8	269.7	12	53.8	438.2	220.0
10"	mm	673.1	276.3	165.1	228.6		374.4	323.9	12	66.5	539.8	410.0
12"	mm	762.0	327.1	184.2	254.0		441.5	381.0	12	73.2	619.3	500.0

FITTACKS

150 Lbs

Blind Flanges
1/2" - 24"ANSI B 16.5
26" - 48" BS 3293

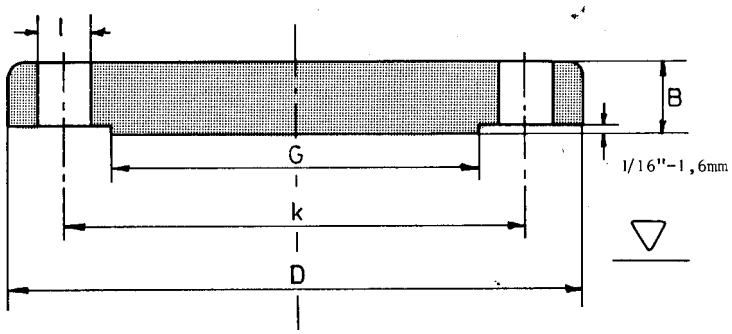

Nominal Pipe Size	mm	Outside Diam. D		Thick-ness Min. B				O.D. of Raised Face G	Number of Holes	Diam of Holes I	Bolt Circle Diam. K	Approx Weight Kg
1/2"	mm	88.9		11.2				35.1	4	15.7	60.5	0.5
3/4"	mm	98.6		12.7				42.9	4	15.7	69.9	0.7
1"	mm	108.0		14.2				50.8	4	15.7	79.2	0.9
1.1/4"	mm	117.3		15.7				63.5	4	15.7	88.9	1.2
1.1/2"	mm	127.0		17.5				73.2	4	15.7	98.6	1.6
2"	mm	152.4		19.1				91.9	4	19.1	120.7	2.5
2.1/2"	mm	177.8		22.4				104.6	4	19.1	139.7	4.0
3"	mm	190.5		23.9				127.0	4	19.1	152.4	4.9
3.1/2"	mm	215.9		23.9				139.7	8	19.1	177.8	6.2
4"	mm	228.6		23.9				157.2	8	19.1	190.5	7.0
5"	mm	254.0		23.9				185.7	8	22.4	215.9	8.7
6"	mm	279.4		25.4				215.9	8	22.4	241.3	11.3
8"	mm	342.9		28.4				269.7	8	22.4	298.5	20.0
10"	mm	406.4		30.2				323.9	12	25.4	362.0	29.0

FITTACKS

150 Lbs

Blind Flanges
1/2" - 24"ANSI B 16.5
26" - 48" BS 3293

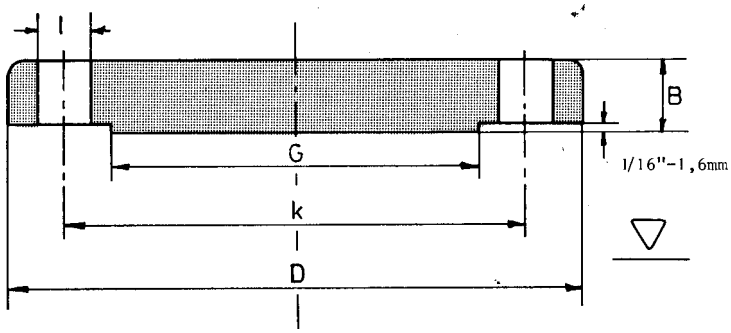

Nominal Pipe Size	mm	Outside Diam. D		Thick-ness Min. B				O.D. of Raised Face G	Number of Holes	Diam of Holes I	Bolt Circle Diam. K	Approx Weight Kg
12"	mm	482.6		31.8				381.0	12	25.4	431.8	44
14"	mm	533.4		35.1				412.8	12	28.4	476.2	59
16"	mm	596.9		36.6				469.9	16	28.4	539.7	76
18"	mm	635.0		39.6				533.4	16	31.8	577.8	94
20"	mm	698.5		42.9				584.2	20	31.8	635.0	122
22"	mm	749.3		46.0				641.2	20	35.1	692.1	161
24"	mm	812.8		47.8				692.2	20	35.1	749.3	185
26"	mm	869.9		50.8				742.9	24	34.9	806.4	238
28"	mm	927.1		52.4				793.7	28	34.9	863.6	281
30"	mm	984.2		54.0				857.2	28	34.9	914.4	327
32"	mm	1060.4		57.1				908.0	28	41.3	977.9	395
34"	mm	1111.2		58.7				958.8	32	41.3	1028.7	449
36"	mm	1168.4		60.3				1022.3	32	41.3	1085.8	511
38"	mm	1238.2		60.3				1073.1	32	41.3	1149.3	570

FITTACKS

150 Lbs

Blind Flanges
1/2" - 24"ANSI B 16.5
26" - 48" BS 3293

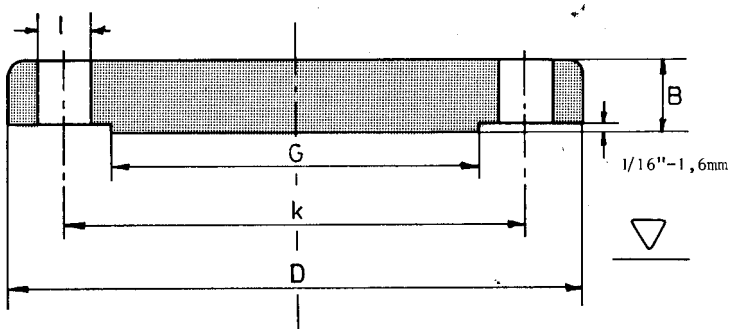

Nominal Pipe Size	mm	Outside Diam. D		Thick-ness Min. B				O.D. of Raised Face G	Number of Holes	Diam of Holes I	Bolt Circle Diam. K	Approx Weight Kg
40"	mm	1289.0		63.5				1123.9	36	41.3	1200.1	651
42"	mm	1346.2		66.7				1193.8	36	41.3	1257.3	746
44"	mm	1403.3		66.7				1244.6	40	41.3	1314.4	810
46"	mm	1454.1		68.3				1295.4	40	41.3	1365.2	891
48"	mm	1511.1		69.8				1358.9	44	41.3	1422.4	983

FITTACKS

300 Lbs

Blind Flanges
1/2" - 24"ANSI B 16.5
26" - 36" BS 3293

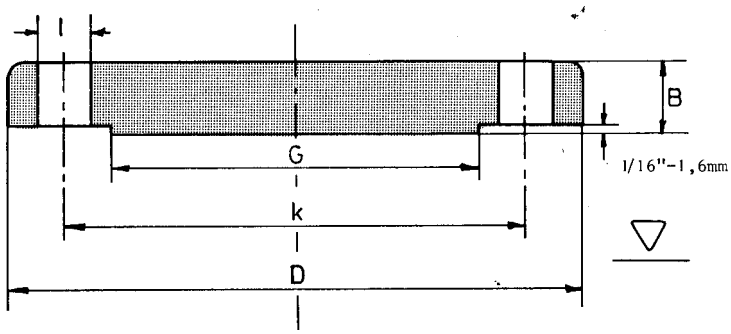

Nominal Pipe Size	mm	Outside Diam. D		Thick-ness Min. B				O.D. of Raised Face G	Number of Holes	Diam of Holes I	Bolt Circle Diam. K	Approx Weight Kg
1/2"	mm	95.2		14.2				35.0	4	15.7	66.7	0.7
3/4"	mm	117.3		15.7				42.9	4	19.0	82.5	1.2
1"	mm	123.9		17.5				50.8	4	19.0	88.9	1.4
1.1/4"	mm	133.3		19.0				63.5	4	19.0	98.4	1.8
1.1/2"	mm	155.4		20.6				73.1	4	22.3	114.3	2.7
2"	mm	165.1		22.3				91.9	8	19.0	127.0	3.2
2.1/2"	mm	190.5		25.4				104.6	8	22.3	149.2	4.9
3"	mm	209.5		28.4				127.0	8	22.3	168.3	7
3.1/2"	mm	228.6		30.2				139.7	8	22.3	184.1	9
4"	mm	254.0		31.7				157.2	8	22.3	200.0	12
5"	mm	279.4		35.0				185.6	8	22.3	234.9	16
6"	mm	317.5		36.5				215.9	12	22.3	269.9	21
8"	mm	381.0		41.1				269.7	12	25.4	330.2	35
10"	mm	444.5		47.7				323.8	16	28.4	387.3	54

FITTACKS

300 Lbs

Blind Flanges
1/2" - 24"ANSI B 16.5
26" - 36" BS 3293

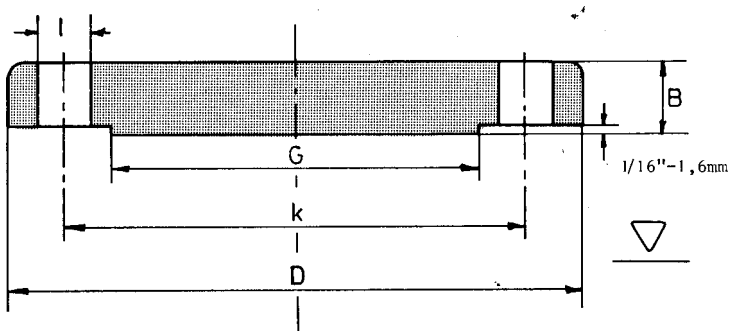

Nominal Pipe Size	mm	Outside Diam. D		Thick-ness Min. B				O.D. of Raised Face G	Number of Holes	Diam of Holes I	Bolt Circle Diam. K	Approx Weight Kg
12"	mm	520.7		50.8				381.0	16	31.7	450.8	87.9
14"	mm	584.2		53.8				412.7	20	31.7	514.3	105
16"	mm	647.7		57.1				469.9	20	35.0	571.5	137
18"	mm	711.2		60.4				533.4	24	35.0	628.6	175
20"	mm	774.7		63.5				584.2	24	35.0	685.8	221
22"	mm	838.2		66.7				641.2	24	41.1	742.9	290
24"	mm	914.4		69.8				692.1	24	41.1	812.8	340
26"	mm	971.5		79.4				749.3	28	44.4	876.3	463
28"	mm	1035.0		85.7				800.1	28	44.4	939.8	561
30"	mm	1092.2		92.1				857.2	28	47.6	996.9	678
32"	mm	1149.3		98.4				914.4	28	50.8	1054.1	802
34"	mm	1206.5		101.6				965.2	28	50.8	1104.9	912
36"	mm	1270.0		104.8				1022.3	32	54.0	1168.4	1042

FITTACKS

600 Lbs

Blind Flanges
1/2" - 24"ANSI B 16.5
26" - 36" BS 3293

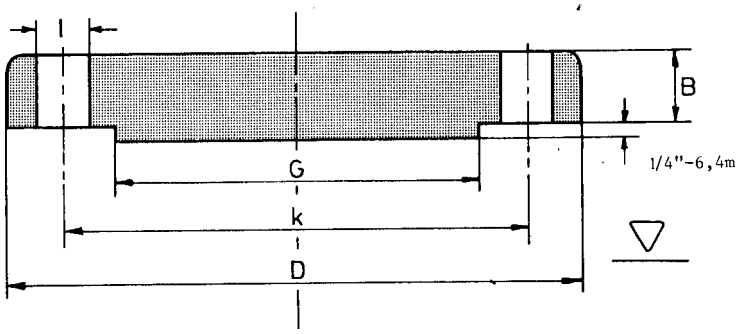

Nominal Pipe Size	mm	Outside Diam. D		Thick-ness Min. B				O.D. of Raised Face G	Number of Holes	Diam of Holes I	Bolt Circle Diam. K	Approx Weight Kg
1/2"	mm	95.3		14.2				35.1	4	15.7	66.5	0.8
3/4"	mm	117.3		15.7				42.9	4	19.1	82.6	1.3
1"	mm	124.0		17.5				50.8	4	19.1	88.9	1.6
1.1/4"	mm	133.4		20.6				63.5	4	19.1	98.6	2.3
1.1/2"	mm	155.4		22.4				73.2	4	22.4	114.3	3.3
2"	mm	165.1		25.4				91.9	8	19.1	127.0	4.2
2.1/2"	mm	190.5		28.4				104.6	8	22.4	149.4	6.2
3"	mm	209.6		31.8				127.0	8	22.4	168.1	8.5
3.1/2"	mm	228.6		35.1				139.7	8	25.4	184.2	11
4"	mm	273.1		38.1				157.2	8	25.4	215.9	18
5"	mm	330.2		44.5				185.7	8	28.4	266.7	30
6"	mm	355.6		47.8				215.9	12	28.4	292.1	36
8"	mm	419.1		55.6				269.7	12	31.8	349.3	65.9
10"	mm	508.0		63.5				323.9	16	35.1	431.8	98

FITTACKS

600 Lbs

Blind Flanges
1/2" - 24"ANSI B 16.5
26" - 36" BS 3293

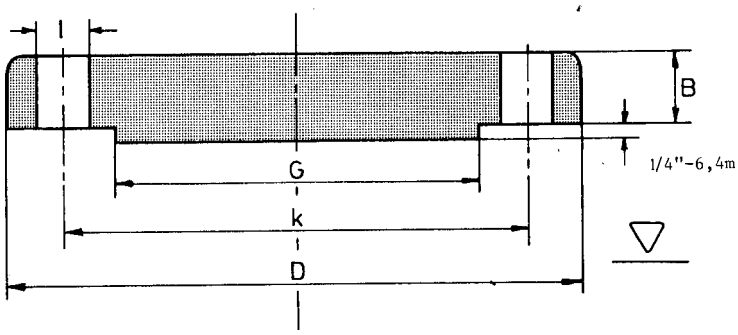

Nominal Pipe Size	mm	Outside Diam. D		Thick-ness Min. B				O.D. of Raised Face G	Number of Holes	Diam of Holes I	Bolt Circle Diam. K	Approx Weight Kg
12"	mm	558.8		66.5				381.0	20	35.1	489.0	124
14"	mm	603.3		69.9				412.8	20	38.1	527.1	151
16"	mm	685.8		76.2				469.9	20	41.1	603.3	214
18"	mm	743.0		82.6				533.4	20	44.5	654.1	272
20"	mm	812.8		88.9				584.2	24	44.5	723.9	349
22"	mm	869.9		95.2				641.2	24	47.6	777.9	454
24"	mm	939.8		101.6				692.2	24	50.8	838.2	533
26"	mm	1016.0		107.9				742.9	28	50.8	914.4	688
28"	mm	1073.1		111.1				793.7	28	54.0	965.2	789
30"	mm	1130.3		114.7				857.2	28	54.0	1022.3	901
32"	mm	1193.8		117.5				908.0	28	60.3	1079.5	1033
34"	mm	1244.6		120.6				958.8	28	60.3	1130.3	1152
36"	mm	1314.4		123.8				1022.3	28	66.7	1193.8	1319

FITTACKS

900 Lbs

Blind Flanges
1/2" - 24"ANSI B 16.5

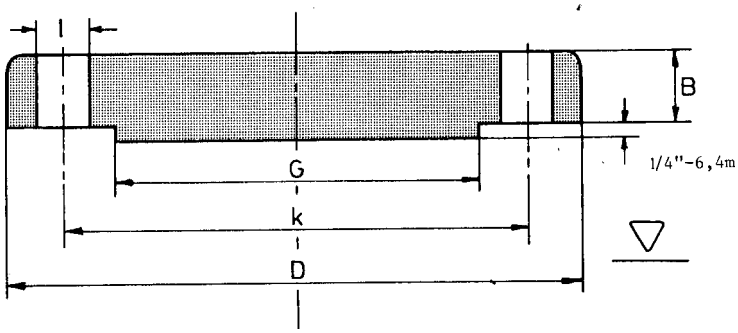

Nominal Pipe Size	mm	Outside Diam. D		Thick-ness Min. B				O.D. of Raised Face G	Number of Holes	Diam of Holes I	Bolt Circle Diam. K	Approx Weight Kg
1/2"	mm	120.6		22.3				35.0	4	22.3	82.5	1.8
3/4"	mm	130.1		25.4				42.9	4	22.3	88.9	2.5
1"	mm	149.3		28.4				50.8	4	25.4	101.6	3.6
1.1/4"	mm	158.7		28.4				63.5	4	25.4	111.2	4.2
1.1/2"	mm	177.8		31.7				73.1	4	28.4	123.9	5.8
2"	mm	215.9		38.1				91.9	8	25.4	165.1	11
2.1/2"	mm	244.3		41.1				104.6	8	28.4	190.5	14
3"	mm	241.3		38.1				127.0	8	25.4	190.5	13.1
4"	mm	292.1		44.4				157.2	8	31.7	234.9	27
5"	mm	349.2		50.8				185.6	8	35.0	279.4	36.5
6"	mm	381.0		55.6				215.9	12	31.7	317.5	48
8"	mm	469.9		63.5				269.7	12	38.1	393.7	83
10"	mm	546.1		69.8				323.8	16	38.1	469.9	122
12"	mm	609.6		79.2				381.0	20	38.1	533.4	173

FITTACKS

900 Lbs

Blind Flanges
1/2" - 24"ANSI B 16.5

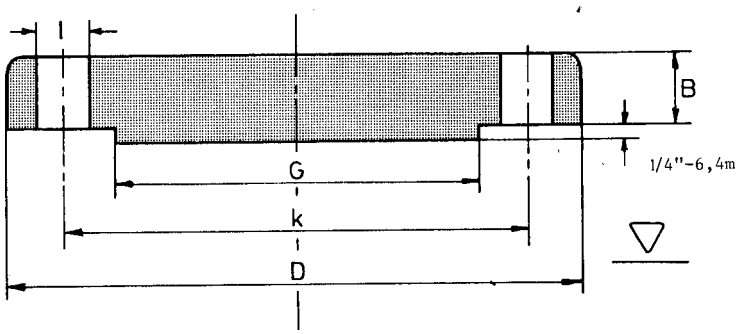

Nominal Pipe Size	mm	Outside Diam. D		Thick-ness Min. B				O.D. of Raised Face G	Number of Holes	Diam of Holes I	Bolt Circle Diam. K	Approx Weight Kg
14"	mm	641.3		85.8				412.7	20	41.1	558.8	206
16"	mm	704.8		88.9				469.9	20	44.4	615.9	259
18"	mm	787.4		101.6				533.4	20	50.8	685.8	367
20"	mm	857.2		107.9				584.2	20	53.8	749.3	463
24"	mm	1041.4		139.7				692.1	20	66.5	901.7	876

FITTACKS

1500 Lbs

Blind Flanges
1/2" - 24"ANSI B 16.5

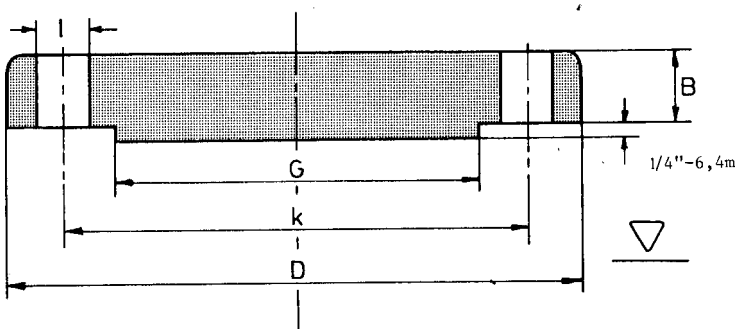

Nominal Pipe Size	mm	Outside Diam. D		Thick-ness Min. B				O.D. of Raised Face G	Number of Holes	Diam of Holes I	Bolt Circle Diam. K	Approx Weight Kg
1/2"	mm	120.6		22.3				35.0	4	22.3	82.5	1.8
3/4"	mm	130.1		25.4				42.9	4	22.3	88.9	2.5
1"	mm	149.3		28.4				50.8	4	25.4	101.6	3.6
1.1/4"	mm	158.7		28.4				63.5	4	25.4	111.1	4.2
1.1/2"	mm	177.8		31.7				73.1	4	28.4	123.8	5.8
2"	mm	215.9		38.1				91.9	8	25.4	165.1	11
2.1/2"	mm	244.3		41.1				104.6	8	28.4	190.5	14
3"	mm	266.7		47.7				127.0	8	31.7	203.2	20
4"	mm	311.1		53.8				157.2	8	35.0	241.3	30
5"	mm	374.6		73.1				185.6	8	41.1	292.1	59
6"	mm	393.7		82.5				215.9	12	38.1	317.5	72
8"	mm	482.6		91.9				269.7	12	44.4	393.7	122
10"	mm	584.2		107.9				323.8	12	50.8	482.6	210
12"	mm	673.1		123.9				381.0	16	53.8	571.5	316

FITTACKS

1500 Lbs

Blind Flanges
1/2" - 24"ANSI B 16.5

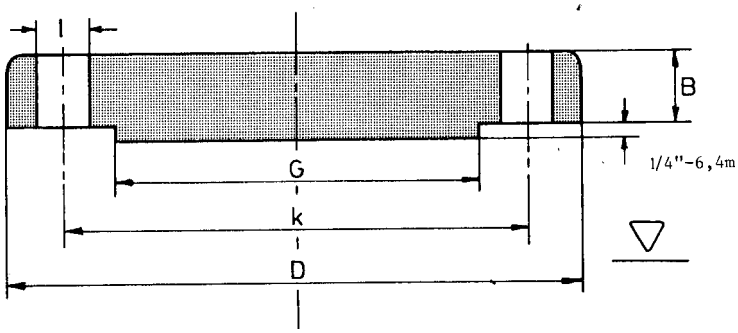

Nominal Pipe Size	mm	Outside Diam. D		Thick-ness Min. B				O.D. of Raised Face G	Number of Holes	Diam of Holes I	Bolt Circle Diam. K	Approx Weight Kg
14"	mm	749.3		133.3				412.7	16	60.4	635.0	420
16"	mm	825.5		146.0				469.9	16	66.5	704.8	560
18"	mm	914.4		162.0				533.4	16	73.1	774.7	760
20"	mm	984.2		177.8				584.2	16	79.2	831.8	965
24"	mm	1168.4		203.2				692.1	16	91.9	990.6	1558

FITTACKS

2500 Lbs

Blind Flanges
1/2" - 24"ANSI B 16.5

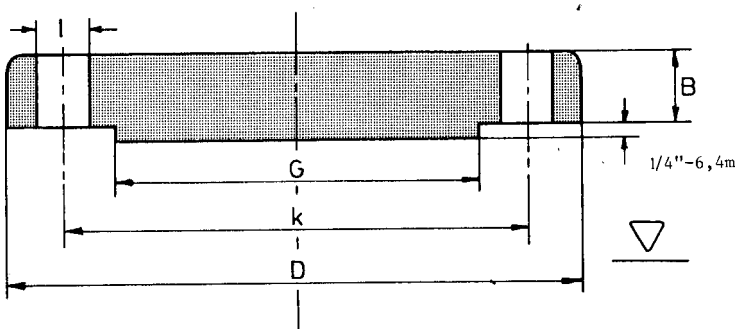

Nominal Pipe Size	mm	Outside Diam. D		Thick-ness Min. B				O.D. of Raised Face G	Number of Holes	Diam of Holes I	Bolt Circle Diam. K	Approx Weight Kg
1/2"	mm	133.4		30.2				35.1	4	22.4	88.9	3
3/4"	mm	139.7		31.8				42.9	4	22.4	95.3	3.5
1"	mm	158.8		35.1				50.8	4	25.4	108.0	5
1.1/4"	mm	184.2		38.1				63.5	4	28.4	130.0	7.4
1.1/2"	mm	203.2		44.5				73.2	4	31.8	146.1	10.4
2"	mm	235.0		50.8				91.9	8	28.4	171.5	16
2.1/2"	mm	266.7		57.2				104.6	8	31.8	196.9	23
3"	mm	304.8		66.5				127.0	8	35.1	228.6	35
4"	mm	355.6		76.2				157.2	8	41.1	273.1	54
5"	mm	419.1		91.9				185.7	8	47.8	323.9	91
6"	mm	482.6		108.0				215.9	8	53.8	368.3	141
8"	mm	552.5		127.0				269.7	12	53.8	438.2	214
10"	mm	673.1		165.1				323.9	12	66.5	539.8	411
12"	mm	762.0		184.1				381.0	12	73.2	619.3	592

FITTACKS

150 Lbs

Lap Joint Flanges
ANSI B 16.5

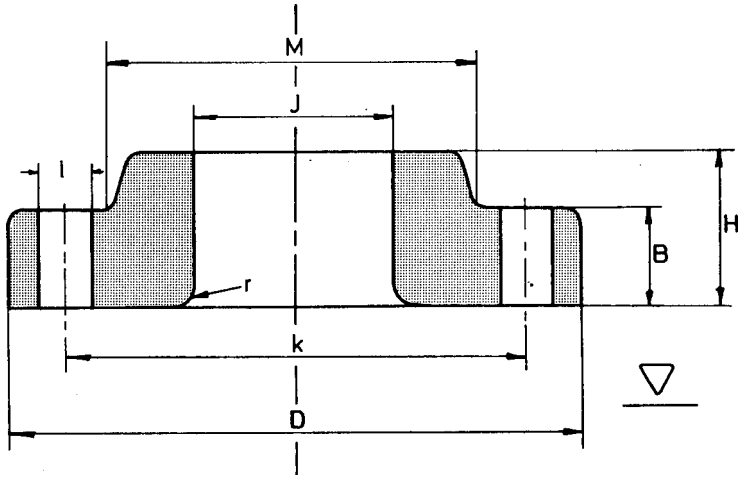

Nominal Pipe Size	mm	Outside Diam. D	Diam. of Bore J	Thick-ness Min. B	Length thru Hub H	Radius of Filet R	Diam. at Base of Hub M		Number of Holes	Diam of Holes I	Bolt Circle Diam. K	Approx Weight Kg
1/2"	mm	88.9	22.9	11.2	15.7	3.0	30.2		4	15.7	60.5	0.4
3/4"	mm	98.6	28.2	12.7	15.7	3.0	38.1		4	15.7	69.9	0.6
1"	mm	108.0	35.1	14.2	17.5	3.0	49.3		4	15.7	79.2	0.8
1.1/4"	mm	117.3	43.7	15.7	20.6	4.8	58.7		4	15.7	88.9	1.0
1.1/2"	mm	127.0	50.0	17.5	22.4	6.4	65.0		4	15.7	98.6	1.3
2"	mm	152.4	62.5	19.1	25.4	7.9	77.7		4	19.1	120.7	2.0
2.1/2"	mm	177.8	75.4	22.4	28.4	7.9	90.4		4	19.1	139.7	3.3
3"	mm	190.5	91.4	23.9	30.2	9.7	108.0		4	19.1	152.4	3.8
3.1/2"	mm	215.9	104.1	23.9	31.8	9.7	122.2		8	19.1	177.8	4.8
4"	mm	228.6	116.8	23.9	33.3	11.2	134.9		8	19.1	190.5	5.3
5"	mm	254.0	144.5	23.9	36.6	11.2	163.6		8	22.4	215.9	6.1
6"	mm	279.4	171.5	25.4	39.6	12.7	192.0		8	22.4	241.3	7.4
8"	mm	342.9	222.3	28.4	44.5	12.7	246.1		8	22.4	298.5	12.1
10"	mm	406.4	277.4	30.2	49.3	12.7	304.8		12	25.4	362.0	16.4

FITTACKS

150 Lbs

Lap Joint Flanges
ANSI B 16.5

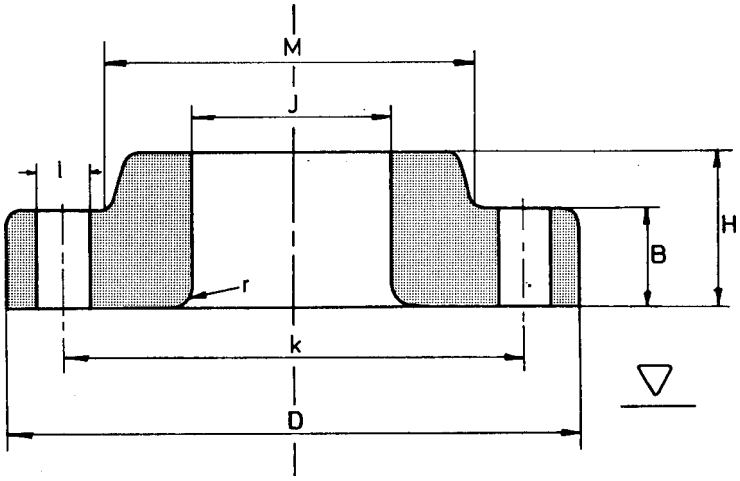

Nominal Pipe Size	mm	Outside Diam. D	Diam. of Bore J	Thick-ness Min. B	Length thru Hub H	Radius of Filet R	Diam. at Base of Hub M		Number of Holes	Diam of Holes I	Bolt Circle Diam. K	Approx Weight Kg
12"	mm	482.6	328.2	31.8	55.6	12.7	365.3		12	25.4	431.8	27
14"	mm	533.4	360.2	35.1	79.2	12.7	400.1		12	28.4	476.3	35
16"	mm	596.9	411.2	36.6	87.4	12.7	457.2		16	28.4	539.8	45
18"	mm	635.0	462.3	39.6	96.8	12.7	505.0		16	31.8	577.9	49
20"	mm	698.5	514.4	42.9	103.1	12.7	558.8		20	31.8	635.0	62
24"	mm	812.8	616.0	47.8	111.3	12.7	663.4		20	35.1	749.3	87

FITTACKS

300 Lbs

Lap Joint Flanges
ANSI B 16.5

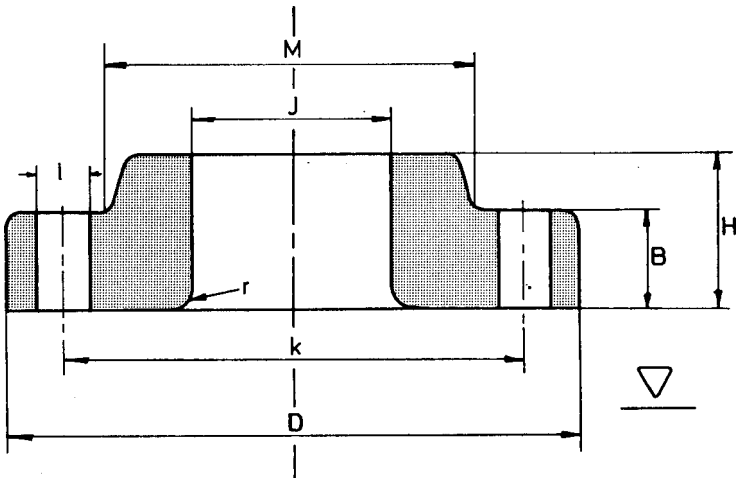

Nominal Pipe Size	mm	Outside Diam. D	Diam. of Bore J	Thick-ness Min. B	Length thru Hub H	Radius of Filet R	Diam. at Base of Hub M		Number of Holes	Diam of Holes I	Bolt Circle Diam. K	Approx Weight Kg
1/2"	mm	95.2	22.9	14.2	22.3	3.0	38.1		4	15.7	66.5	0.7
3/4"	mm	117.3	28.2	15.7	25.4	3.0	47.7		4	19.0	82.5	1.1
1"	mm	123.9	35.0	17.5	26.9	3.0	53.8		4	19.0	88.9	1.4
1.1/4"	mm	133.3	43.7	19.0	26.9	4.8	63.5		4	19.0	98.5	1.7
1.1/2"	mm	155.4	50.0	20.6	30.2	6.4	69.8		4	22.3	114.3	2.5
2"	mm	165.1	62.5	22.3	33.2	7.8	84.0		8	19.0	127.0	2.9
2.1/2"	mm	190.5	75.4	25.4	38.1	7.8	100.0		8	22.3	149.3	4.3
3"	mm	209.5	91.4	28.4	42.9	9.6	117.3		8	22.3	168.1	5.8
3.1/2"	mm	228.6	104.1	30.2	44.4	9.6	133.3		8	22.3	184.1	7.3
4"	mm	254.0	116.8	31.7	47.7	11.1	146.0		8	22.3	200.1	10
5"	mm	279.4	144.5	35.0	50.8	11.1	177.8		8	22.3	234.9	12.2
6"	mm	317.5	171.4	36.5	52.3	12.7	206.2		12	22.3	269.7	15.5
8"	mm	381.0	222.2	41.1	61.9	12.7	260.3		12	25.4	330.2	24.1
10"	mm	444.5	277.4	47.9	95.2	12.7	320.5		16	28.4	387.3	34.4

FITTACKS

300 Lbs

Lap Joint Flanges
ANSI B 16.5

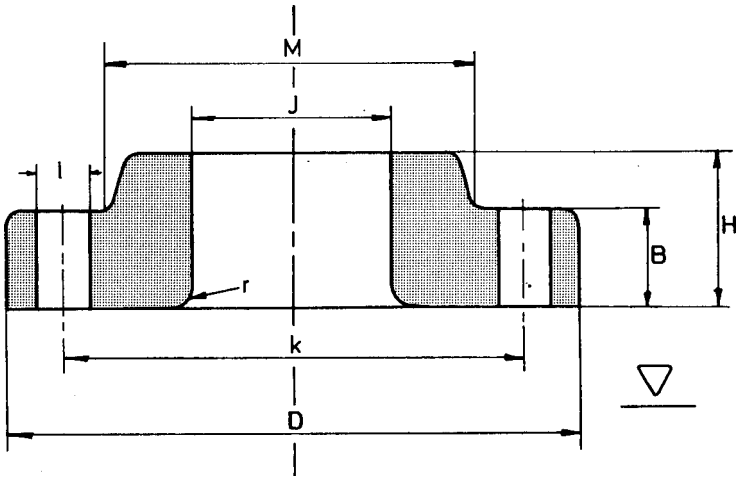

Nominal Pipe Size	mm	Outside Diam. D	Diam. of Bore J	Thick-ness Min. B	Length thru Hub H	Radius of Filet R	Diam. at Base of Hub M		Number of Holes	Diam of Holes I	Bolt Circle Diam. K	Approx Weight Kg
12"	mm	520.7	328.2	50.8	101.6	12.7	374.6		16	31.7	450.8	51
14"	mm	584.2	360.2	53.8	111.2	12.7	425.4		20	31.7	514.3	71
16"	mm	647.7	411.2	57.1	120.6	12.7	482.6		20	35.0	571.5	90
18"	mm	711.2	462.3	60.4	130.0	12.7	533.4		24	35.0	628.6	111
20"	mm	774.7	514.3	63.5	139.7	12.7	587.2		24	35.0	685.8	137
24"	mm	914.4	615.9	69.8	152.4	12.7	701.5		24	41.1	812.8	204

FITTACKS

600 Lbs

Lap Joint Flanges
ANSI B 16.5

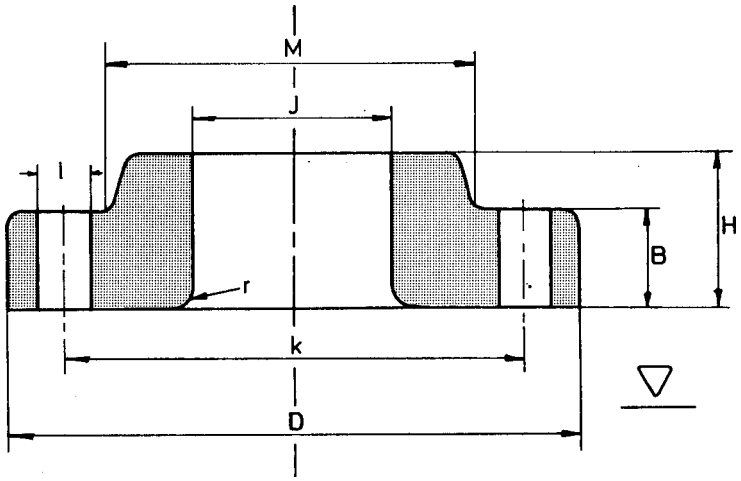

Nominal Pipe Size	mm	Outside Diam. D	Diam. of Bore J	Thick-ness Min. B	Length thru Hub H	Radius of Filet R	Diam. at Base of Hub M		Number of Holes	Diam of Holes I	Bolt Circle Diam. K	Approx Weight Kg
1/2"	mm	95.3	22.9	14.2	22.4	3.0	38.1		4	15.7	66.5	0.8
3/4"	mm	117.3	28.2	15.7	25.4	3.0	47.8		4	19.1	82.6	1.3
1"	mm	124.0	35.1	17.5	26.9	3.0	53.8		4	19.1	88.9	1.5
1.1/4"	mm	133.4	43.7	20.6	28.4	4.8	63.5		4	19.1	98.6	2.0
1.1/2"	mm	155.4	50.0	22.4	31.8	6.4	69.9		4	22.4	114.3	2.9
2"	mm	165.1	62.5	25.4	36.6	7.9	84.1		8	19.1	127.0	3.6
2.1/2"	mm	190.5	75.4	28.4	41.1	7.9	100.1		8	22.4	149.4	5.3
3"	mm	209.6	91.4	31.8	46.0	9.7	117.3		8	22.4	168.1	7.0
3.1/2"	mm	228.6	104.1	35.1	49.3	9.7	133.4		8	25.4	184.2	9.0
4"	mm	273.1	116.8	38.1	53.8	11.2	152.4		8	25.4	215.9	14.4
5"	mm	330.2	144.5	44.5	60.5	11.2	189.0		8	28.6	266.7	24.3
6"	mm	355.6	171.5	47.8	66.5	12.7	222.3		12	28.6	292.1	28.5
8"	mm	419.1	222.3	55.6	76.2	12.7	273.1		12	31.8	349.3	43.1
10"	mm	508.0	277.4	63.5	111.3	12.7	342.9		16	35.1	431.8	70.5

FITTACKS

600 Lbs

Lap Joint Flanges
ANSI B 16.5

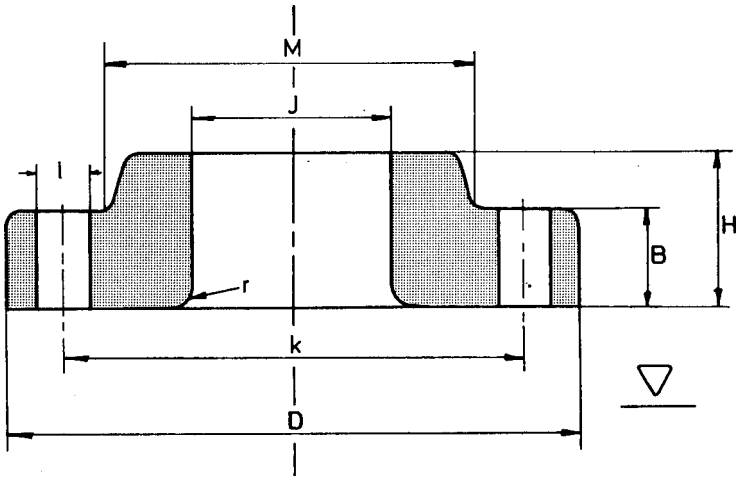

Nominal Pipe Size	mm	Outside Diam. D	Diam. of Bore J	Thick-ness Min. B	Length thru Hub H	Radius of Filet R	Diam. at Base of Hub M		Number of Holes	Diam of Holes I	Bolt Circle Diam. K	Approx Weight Kg
12"	mm	558.8	328.2	66.5	117.3	12.7	400.1		20	35.1	489.0	87
14"	mm	603.3	360.2	69.9	127.0	12.7	431.8		20	38.1	527.1	100
16"	mm	685.8	411.2	76.2	139.7	12.7	495.3		20	41.1	603.3	145
18"	mm	743.0	462.3	82.6	152.4	12.7	546.1		20	44.5	654.1	177
20"	mm	812.8	514.4	88.9	165.1	12.7	609.6		24	44.5	723.9	225
24"	mm	939.8	616.0	101.6	184.1	12.7	717.5		24	50.8	838.2	318

FITTACKS

900 Lbs

Lap Joint Flanges
ANSI B 16.5

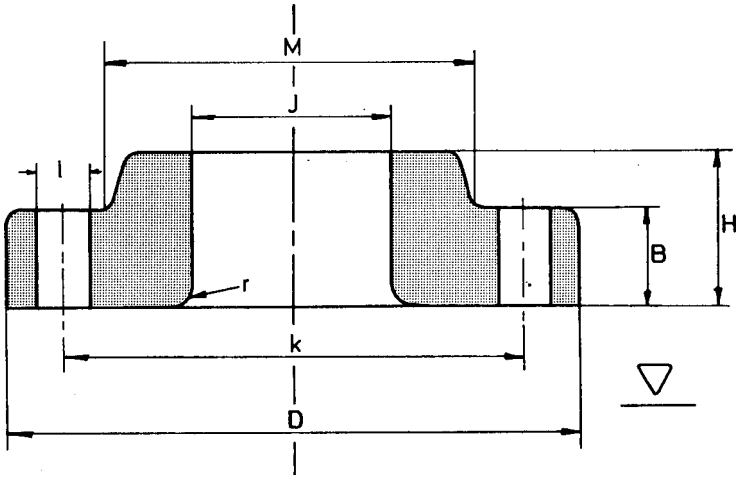

Nominal Pipe Size	mm	Outside Diam. D	Diam. of Bore J	Thick-ness Min. B	Length thru Hub H	Radius of Filet R	Diam. at Base of Hub M		Number of Holes	Diam of Holes I	Bolt Circle Diam. K	Approx Weight Kg
1/2"	mm	120.6	22.9	22.3	31.7	3.0	38.1		4	22.3	82.5	1.8
3/4"	mm	130.0	28.2	25.4	35.0	3.0	44.4		4	22.3	88.9	2.3
1"	mm	149.3	35.0	28.4	41.1	3.0	52.3		4	25.4	101.6	3.4
1.1/4"	mm	158.7	43.7	28.4	41.1	4.8	63.5		4	25.4	111.2	3.9
1.1/2"	mm	177.8	50.0	31.7	44.4	6.4	69.8		4	28.4	123.9	5.3
2"	mm	215.9	62.5	38.1	57.1	7.8	104.6		8	25.4	165.1	10
2.1/2"	mm	244.3	75.4	41.1	63.5	7.8	123.9		8	28.4	190.5	14
3"	mm	241.3	91.4	38.1	53.8	9.6	127.0		8	25.4	190.5	11.3
4"	mm	292.1	116.8	44.4	69.8	11.1	158.7		8	31.7	234.9	19.2
5"	mm	349.2	144.5	50.8	79.2	11.1	190.5		8	35.0	279.4	31.2
6"	mm	381.0	171.4	55.6	85.8	12.7	234.9		12	31.7	317.5	40.5
8"	mm	469.9	222.2	63.5	114.3	12.7	298.4		12	38.1	393.7	71.5
10"	mm	546.1	277.4	69.8	127.0	12.7	368.3		16	38.1	469.9	104
12"	mm	609.6	328.2	79.2	142.7	12.7	419.1		20	38.1	533.4	139

FITTACKS

900 Lbs

Lap Joint Flanges
ANSI B 16.5

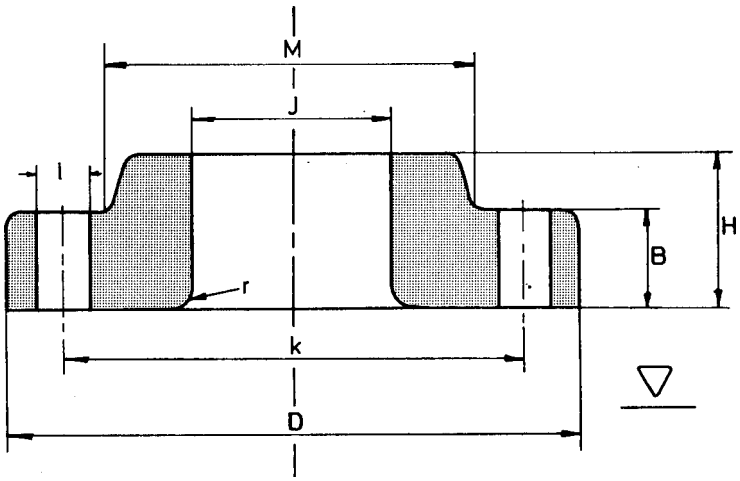

Nominal Pipe Size	mm	Outside Diam. D	Diam. of Bore J	Thick-ness Min. B	Length thru Hub H	Radius of Filet R	Diam. at Base of Hub M		Number of Holes	Diam of Holes I	Bolt Circle Diam. K	Approx Weight Kg
14"	mm	641.3	360.2	85.8	155.4	12.7	450.8		20	41.1	558.8	161
16"	mm	704.8	411.2	88.9	165.1	12.7	508.0		20	44.4	615.9	194
18"	mm	787.4	462.3	101.6	190.5	12.7	565.1		20	50.8	685.8	267
20"	mm	857.2	514.3	107.9	209.5	12.7	622.3		20	53.8	749.3	334
24"	mm	1041.4	615.9	139.7	266.7	12.7	749.3		20	66.5	901.7	618

FITTACKS

1500 Lbs

Lap Joint Flanges
ANSI B 16.5

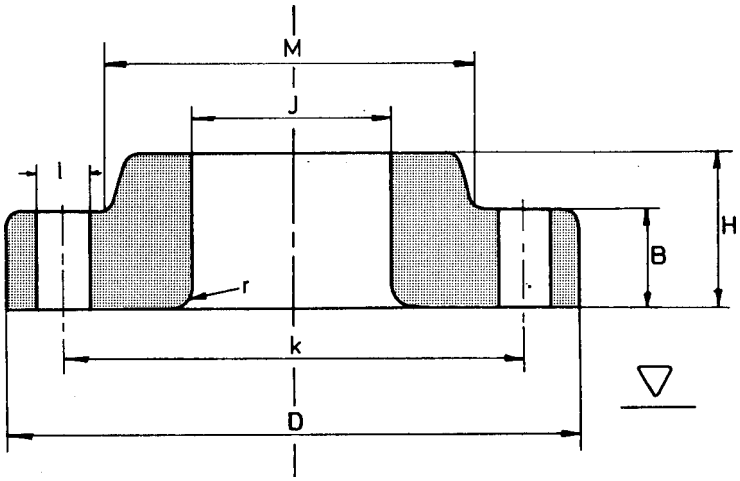

Nominal Pipe Size	mm	Outside Diam. D	Diam. of Bore J	Thick-ness Min. B	Length thru Hub H	Radius of Filet R	Diam. at Base of Hub M		Number of Holes	Diam of Holes I	Bolt Circle Diam. K	Approx Weight Kg
1/2"	mm	120.6	22.9	22.3	31.7	3.0	38.1		4	22.3	82.5	1.8
3/4"	mm	130.0	28.2	25.4	35.0	3.0	44.4		4	22.3	88.9	2.3
1"	mm	149.3	35.0	28.4	41.1	3.0	52.3		4	25.4	101.6	3.4
1.1/4"	mm	158.7	43.7	28.4	41.1	4.8	63.5		4	25.4	111.2	3.9
1.1/2"	mm	177.8	50.0	31.7	44.4	6.4	69.8		4	28.4	123.9	5.3
2"	mm	215.9	62.5	38.1	57.1	7.8	104.6		8	25.4	165.1	10
2.1/2"	mm	244.3	75.4	41.1	63.5	7.8	123.9		8	28.4	190.5	14
3"	mm	266.7	91.4	47.7	73.1	9.6	133.3		8	31.7	203.2	18
4"	mm	311.1	116.8	53.8	90.4	11.1	162.0		8	35.0	241.3	28
5"	mm	374.6	144.5	73.1	104.6	11.1	196.8		8	41.1	292.1	52
6"	mm	399.7	171.4	82.5	119.1	12.7	228.6		12	38.1	317.5	62
8"	mm	482.6	222.2	91.9	142.7	12.7	292.1		12	44.4	393.7	105
10"	mm	584.2	277.4	107.9	177.8	12.7	368.3		12	50.8	482.6	179
12"	mm	673.1	328.2	123.9	218.9	12.7	450.8		16	53.8	571.5	269

FITTACKS

1500 Lbs

Lap Joint Flanges
ANSI B 16.5

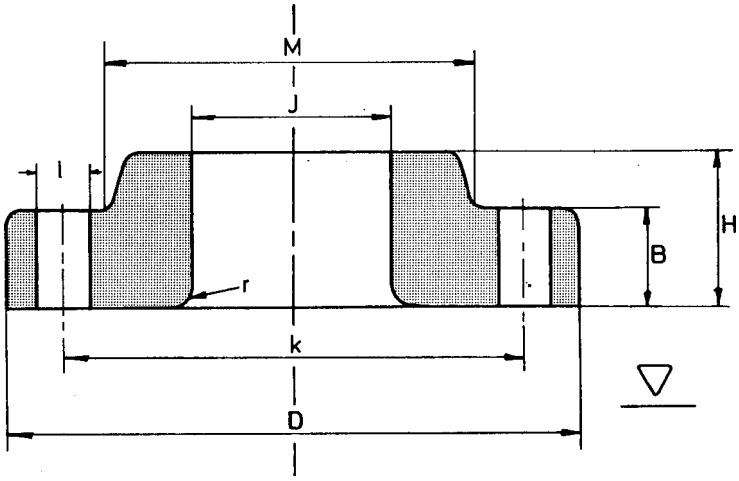

Nominal Pipe Size	mm	Outside Diam. D	Diam. of Bore J	Thick-ness Min. B	Length thru Hub H	Radius of Filet R	Diam. at Base of Hub M		Number of Holes	Diam of Holes I	Bolt Circle Diam. K	Approx Weight Kg
14"	mm	749.3	360.2	133.3	241.3	12.7	495.3		16	60.4	635.0	365
16"	mm	825.5	411.2	146.0	260.3	12.7	552.4		16	66.5	704.8	459
18"	mm	914.4	462.3	162.0	276.2	12.7	596.9		16	73.1	774.7	598
20"	mm	984.2	514.3	177.8	292.1	12.7	641.3		16	79.2	831.8	712
24"	mm	1168.4	615.9	203.2	330.2	12.7	762.0		16	91.9	990.6	1090

FITTACKS

2500 Lbs

Lap Joint Flanges
ANSI B 16.5

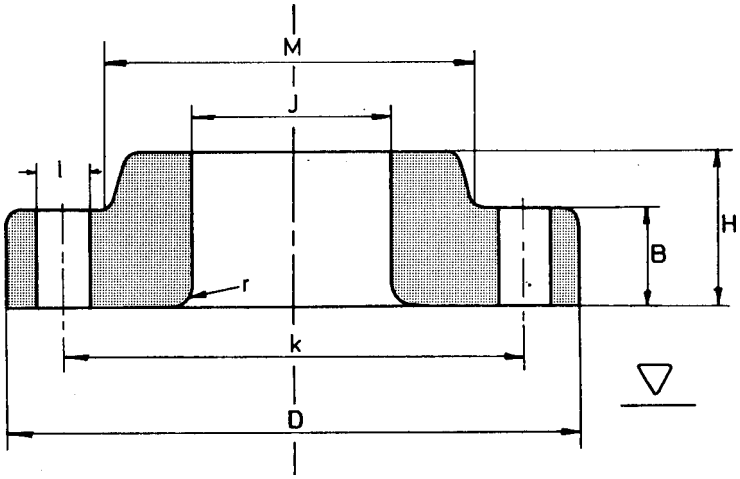

Nominal Pipe Size	mm	Outside Diam. D	Diam. of Bore J	Thick-ness Min. B	Length thru Hub H	Radius of Filet R	Diam. at Base of Hub M		Number of Holes	Diam of Holes I	Bolt Circle Diam. K	Approx Weight Kg
1/2"	mm	133.4	22.9	30.2	39.6	3.0	42.9		4	22.4	88.9	3
3/4"	mm	139.7	28.2	31.8	42.9	3.0	50.8		4	22.4	95.3	3.5
1"	mm	158.8	35.1	35.1	47.8	3.0	57.2		4	25.4	108.0	4.8
1.1/4"	mm	184.2	43.7	38.1	52.3	4.8	73.2		4	28.4	130.0	7.1
1.1/2"	mm	203.2	50.0	44.5	60.5	6.4	79.2		4	31.8	146.1	10
2"	mm	235.0	62.5	50.8	69.9	7.9	95.3		8	28.4	171.5	14.7
2.1/2"	mm	266.7	75.4	57.2	79.2	7.9	114.3		8	31.8	196.9	22
3"	mm	304.8	91.4	66.5	91.9	9.7	133.4		8	35.1	228.6	33
4"	mm	355.6	116.8	76.2	107.9	11.2	165.1		8	41.1	273.1	53
5"	mm	419.1	144.5	91.9	130.2	11.2	203.2		8	47.8	323.9	83
6"	mm	482.6	171.5	108.0	152.4	12.7	235.0		8	53.8	368.3	127
8"	mm	552.5	222.3	127.0	177.8	12.7	304.8		12	53.8	438.2	186
10"	mm	673.1	277.4	165.1	228.6	12.7	374.7		12	66.5	539.8	352
12"	mm	762.0	328.2	184.2	254.0	12.7	441.5		12	73.2	619.3	501

FITTACKS

150 Lbs

Socket Weld Flanges
ANSI B 16.5

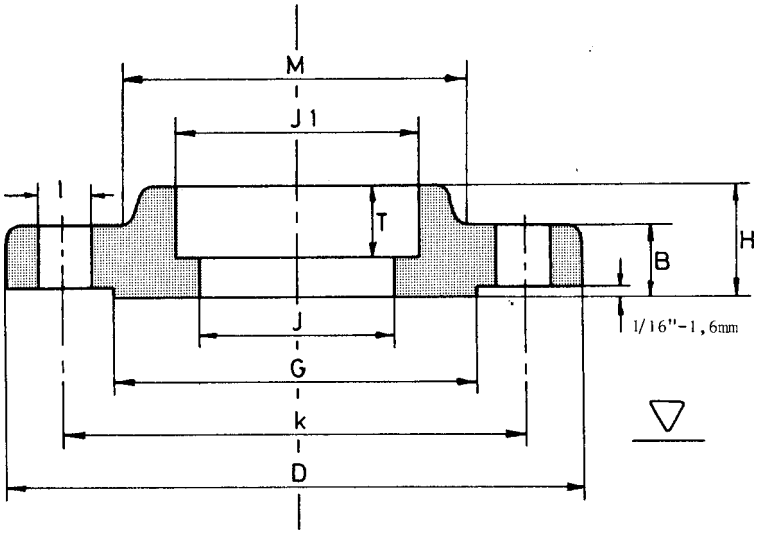

Diameter J to be specified4

Nominal Pipe Size	mm	Outside Diam. D	Bore of Socket J 1	Depth of Socket T	Thick-ness Min. B	Length thru Hub H	Diam. at Base of Hub M	O.D. of Raised Face G	Number of Holes	Diam of Holes I	Bolt Circle Diam. K	Approx Weight Kg
1/4"	mm	88.9	14.7	9.6	11.2	15.7	30.2	35.1	4	15.7	60.5	0.4
3/8"	mm	88.9	18.3	9.6	11.2	15.7	30.2	35.1	4	15.7	60.5	0.4
1/2"	mm	88.9	22.4	9.6	11.2	15.7	30.2	35.1	4	15.7	60.5	0.5
3/4"	mm	98.6	27.7	11.1	12.7	15.7	38.1	42.9	4	15.7	69.9	0.6
1"	mm	108.0	34.5	12.7	14.2	17.5	49.2	50.8	4	15.7	79.2	0.9
1.1/4"	mm	117.3	43.2	14.2	15.7	20.6	58.7	63.5	4	15.7	88.9	1.1
1.1/2"	mm	127.0	49.5	15.7	17.5	22.4	65.0	73.1	4	15.7	98.6	1.4
2"	mm	152.4	62.0	17.5	19.1	25.4	77.7	91.9	4	19.1	120.7	2.1
2.1/2"	mm	177.8	74.7	19.0	22.4	28.4	90.4	104.6	4	19.1	139.7	3.4
3"	mm	190.5	90.7	20.6	23.9	30.2	108.0	127.0	4	19.1	152.4	3.9
3.1/2"	mm	215.9	103.4	22.2	23.9	31.7	122.2	139.7	8	19.1	177.8	5.0
4"	mm	228.6	116.1	23.8	23.9	33.3	134.9	157.2	8	19.1	190.5	5.9
5"	mm	254.0	143.8	23.8	23.9	36.5	163.5	185.7	8	22.2	215.9	6.8
6"	mm	279.4	170.7	27.0	25.4	39.7	192.1	215.9	8	22.2	241.3	8.6

FITTACKS

150 Lbs

Socket Weld Flanges
ANSI B 16.5

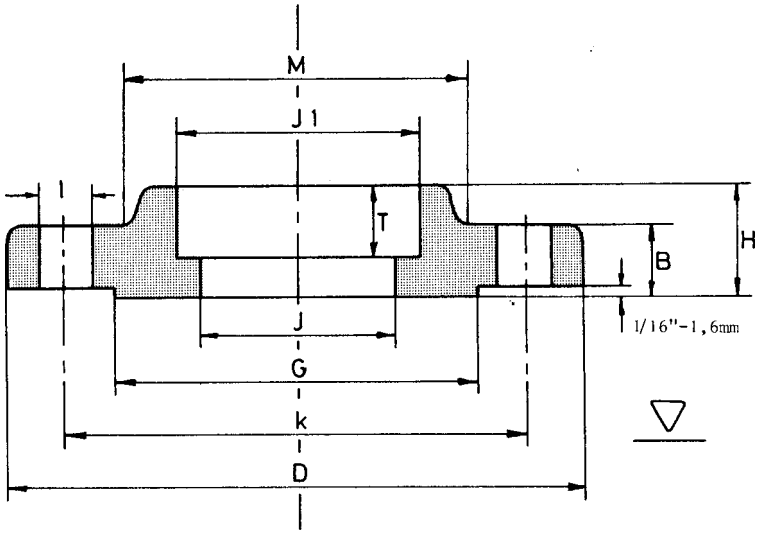

Diameter J to be specified4

Nominal Pipe Size	mm	Outside Diam. D	Bore of Socket J 1	Depth of Socket T	Thick-ness Min. B	Length thru Hub H	Diam. at Base of Hub M	O.D. of Raised Face G	Number of Holes	Diam of Holes I	Bolt Circle Diam. K	Approx Weight Kg
8"	mm	342.9	221.5	31.7	28.6	44.4	246.1	269.9	8	22.4	298.4	13.7
10"	mm	406.4	276.3	33.3	30.2	49.2	304.8	323.8	12	25.4	361.9	19.6
12"	mm	482.6	327.1	39.7	31.8	55.6	365.1	381.0	12	25.4	431.8	29
14"	mm	533.4	359.1	41.3	34.9	57.1	400.0	412.7	12	28.6	476.2	41
16"	mm	596.9	410.5	44.4	36.5	63.5	457.2	469.9	16	28.6	539.7	44.5
18"	mm	635.0	461.8	49.2	39.7	68.3	504.8	533.4	16	31.7	577.8	59
20"	mm	698.5	513.1	54.0	42.9	73.0	558.8	584.2	20	31.7	635.0	75
24"	mm	812.8	615.9	63.5	47.6	82.5	663.6	692.1	20	34.9	749.3	99

FITTACKS

300 Lbs

Socket Weld Flanges
ANSI B 16.5

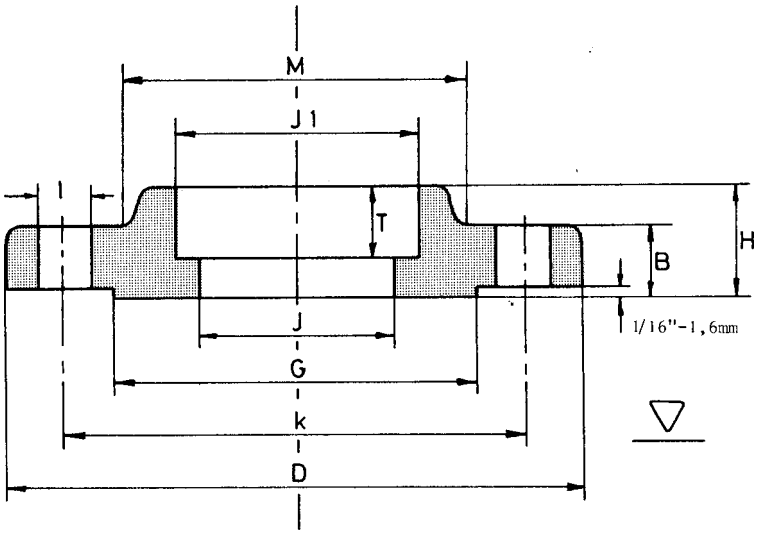

Diameter J to be specified

Nominal Pipe Size	mm	Outside Diam. D	Bore of Socket J 1	Depth of Socket T	Thick-ness Min. B	Length thru Hub H	Diam. at Base of Hub M	O.D. of Raised Face G	Number of Holes	Diam of Holes I	Bolt Circle Diam. K	Approx Weight Kg
1/4"	mm	95.2	14.7	9.6	14.2	22.3	38.1	35.1	4	15.7	66.5	0.7
3/8"	mm	95.2	18.3	9.6	14.2	22.3	38.1	35.1	4	15.7	66.5	0.8
1/2"	mm	95.2	22.4	9.6	14.2	22.3	38.1	35.1	4	15.7	66.5	0.9
3/4"	mm	117.3	27.7	11.1	15.7	25.4	47.7	42.9	4	19.1	82.5	1.2
1"	mm	123.9	34.5	12.7	17.5	26.9	53.8	50.8	4	19.1	88.9	1.4
1.1/4"	mm	133.3	43.2	14.2	19.0	26.9	63.5	63.5	4	19.1	98.5	1.8
1.1/2"	mm	155.4	49.5	15.7	20.6	30.2	69.8	73.1	4	22.3	114.3	2.6
2"	mm	165.1	62.0	17.5	22.3	33.2	84.0	91.9	8	19.1	127.0	3.0
2.1/2"	mm	190.5	74.7	19.0	25.4	38.1	100.0	104.6	8	22.3	149.3	4.4
3"	mm	209.5	90.7	20.6	28.4	42.9	117.3	127.0	8	22.3	168.1	6.0
3.1/2"	mm	228.6	103.4	22.3	30.2	44.4	133.3	139.7	8	22.3	184.1	7.7
4"	mm	254.0	116.1	23.84	31.8	47.6	146.0	157.2	8	22.3	200.0	10

FITTACKS

600 Lbs

Socket Weld Flanges
ANSI B 16.5

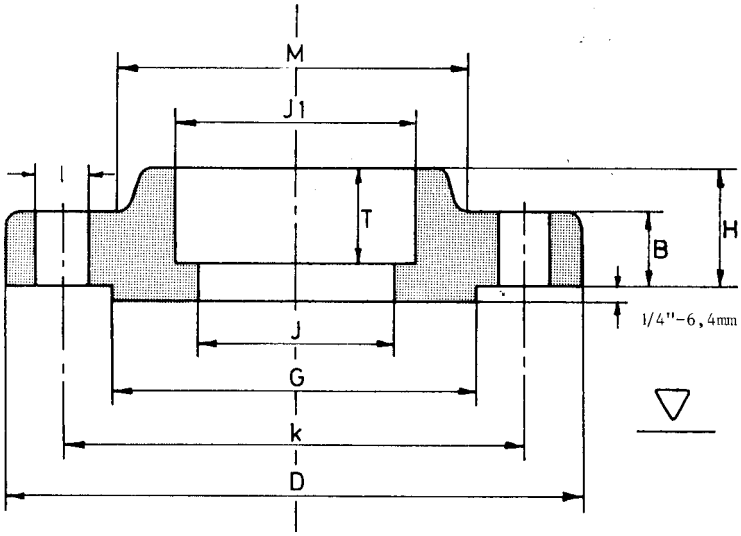

Diameter J to be specified

Nominal Pipe Size	mm	Outside Diam. D	Bore of Socket J 1	Depth of Socket T	Thick-ness Min. B	Length thru Hub H	Diam. at Base of Hub M	O.D. of Raised Face G	Number of Holes	Diam of Holes I	Bolt Circle Diam. K	Approx Weight Kg
1/4"	mm	95.3	14.7	9.6	14.2	22.4	38.1	35.1	4	15.7	66.5	0.7
3/8"	mm	95.3	18.3	9.6	14.2	22.4	38.1	35.1	4	15.7	66.5	0.8
1/2"	mm	95.3	22.4	9.6	14.2	22.4	38.1	35.1	4	15.7	66.5	0.9
3/4"	mm	117.3	27.7	11.1	15.7	25.4	47.8	42.9	4	19.1	82.6	1.3
1"	mm	124.0	34.5	12.7	17.5	26.9	53.8	50.8	4	19.1	88.9	1.6
1.1/4"	mm	133.4	43.2	14.2	20.6	28.4	63.5	63.5	4	19.1	98.6	2.1
1.1/2"	mm	155.4	49.5	15.7	22.4	31.8	69.9	73.1	4	22.4	114.3	3.0
2"	mm	165.1	62.0	17.5	25.4	36.6	84.1	91.9	8	19.1	127.0	3.7
2.1/2"	mm	190.5	74.7	19.0	28.4	41.1	100.0	104.6	8	22.4	149.4	5.4
3"	mm	209.6	90.7	20.6	31.8	46.0	117.3	127.0	8	22.4	168.1	7.1
3.1/2"	mm	228.6	103.4	22.2	35.1	49.2	133.4	139.7	8	25.4	184.2	9.5

FITTACKS

1500 Lbs

Socket Weld Flanges
ANSI B 16.5

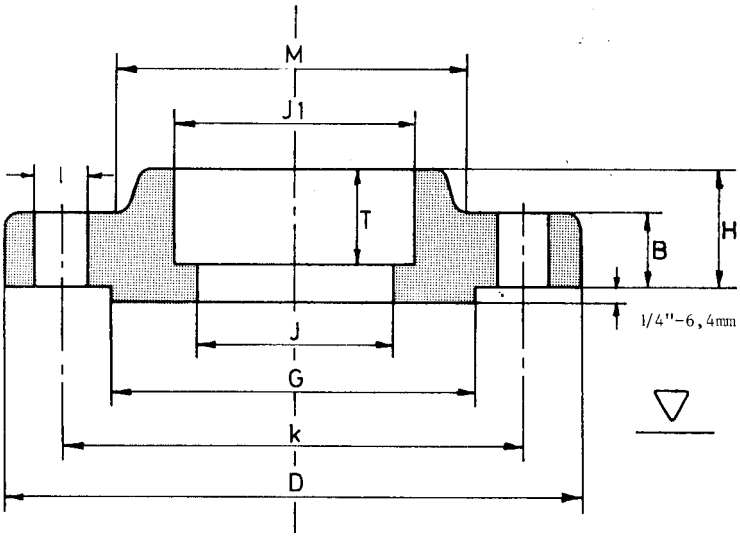

Diameter J to be specified

Nominal Pipe Size	mm	Outside Diam. D	Bore of Socket J 1	Depth of Socket T	Thick-ness Min. B	Length thru Hub H	Diam. at Base of Hub M	O.D. of Raised Face G	Number of Holes	Diam of Holes I	Bolt Circle Diam. K	Approx Weight Kg
1/2"	mm	120.6	22.4	9.6	22.3	31.7	38.1	35.1	4	22.3	82.5	1.8
3/4"	mm	130.0	27.7	11.1	25.4	35.0	44.4	42.9	4	22.3	88.9	2.4
1"	mm	149.3	34.5	12.7	28.4	41.1	52.3	50.8	4	25.4	101.6	3.5
1.1/4"	mm	158.7	43.2	14.2	28.4	41.1	63.5	63.5	4	25.4	111.2	4.0
1.1/2"	mm	177.8	49.5	15.7	31.7	44.5	69.8	73.1	4	28.4	123.9	5.4
2"	mm	215.9	62.0	17.5	38.1	57.1	104.6	91.9	8	25.4	165.1	10.2
2.1/2"	mm	244.3	74.7	19.0	41.1	63.5	123.9	104.6	8	28.4	190.5	13.9

FITTACKS

150 Lbs

Threaded Flanges
ANSI B 16.5

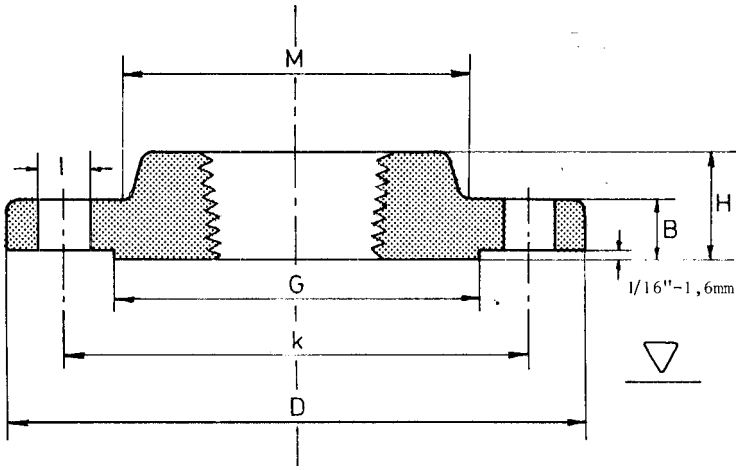

Nominal Pipe Size	mm	Outside Diam. D	Diam. of Bore J	Thick-ness Min. B	Length thru Hub H	Thread Length T	Diam. at Base of Hub M	O.D. of Raised Face G	Number of Holes	Diam of Holes I	Bolt Circle Diam. K	Approx Weight Kg
1/2"	mm	88.9		11.2	15.7		30.2	35.1	4	15.7	60.5	0.4
3/4"	mm	98.6		12.7	15.7		38.1	42.9	4	15.7	69.9	0.6
1"	mm	108.0		14.2	17.5		49.3	50.8	4	15.7	79.2	0.8
1.1/4"	mm	117.3		15.7	20.6		58.7	63.5	4	15.7	88.9	1.1
1.1/2"	mm	127.0		17.5	22.4		65.0	73.2	4	15.7	98.6	1.4
2"	mm	152.4		19.1	25.4		77.7	91.9	4	19.1	120.7	2.1
2.1/2"	mm	177.8		22.4	28.4		90.4	104.6	4	19.1	139.7	3.3
3"	mm	190.5		23.9	30.2		108.0	127.0	4	19.1	152.4	3.9
3.1/2"	mm	215.9		23.9	31.8		122.2	139.7	8	19.1	177.8	4.8
4"	mm	228.6		23.9	33.3		134.9	157.2	8	19.1	190.5	5.3
5"	mm	254.0		23.9	36.6		163.6	185.7	8	22.4	215.9	6.1
6"	mm	279.4		25.4	39.6		192.0	215.9	8	22.4	241.3	7.6
8"	mm	342.9		28.4	44.5		246.1	269.7	8	22.4	298.5	12.1
10"	mm	406.4		30.2	49.3		304.8	323.9	12	25.4	362.0	16.5

FITTACKS

150 Lbs

Threaded Flanges
ANSI B 16.5

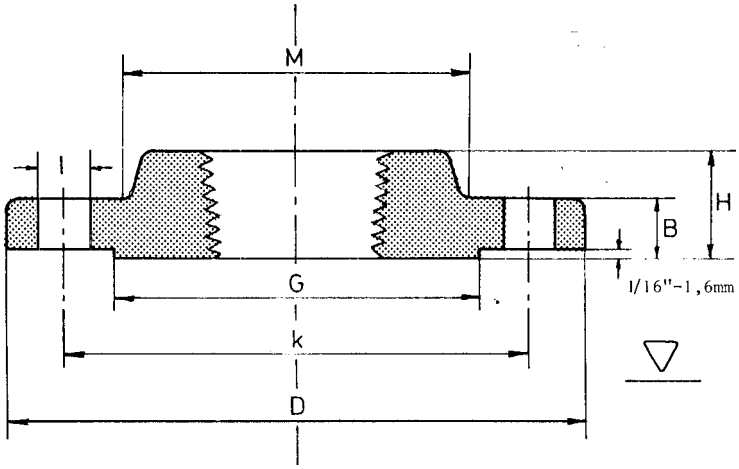

Nominal Pipe Size	mm	Outside Diam. D	Diam. of Bore J	Thick-ness Min. B	Length thru Hub H	Thread Length T	Diam. at Base of Hub M	O.D. of Raised Face G	Number of Holes	Diam of Holes I	Bolt Circle Diam. K	Approx Weight Kg
12"	mm	482.6		31.8	55.6		365.3	381.0	12	25.4	431.8	27
14"	mm	533.4		35.1	57.2		400.1	412.8	12	28.4	476.3	35
16"	mm	596.9		36.6	63.5		457.2	469.9	16	28.4	539.8	45
18"	mm	635.0		39.6	68.3		505.0	533.4	16	31.8	577.9	49
20"	mm	698.5		42.9	73.2		558.8	584.2	20	31.8	635.0	62
24"	mm	812.8		47.8	82.6		663.4	692.1	20	35.1	749.3	87

FITTACKS

300 Lbs

Threaded Flanges
ANSI B 16.5

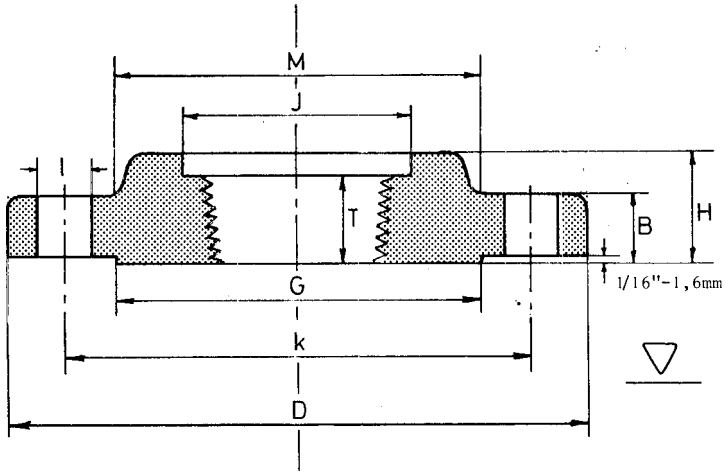

Nominal Pipe Size	mm	Outside Diam. D	Diam. of Bore J	Thick-ness Min. B	Length thru Hub H	Thread Length T	Diam. at Base of Hub M	O.D. of Raised Face G	Number of Holes	Diam of Holes I	Bolt Circle Diam. K	Approx Weight Kg
1/2"	mm	95.2	23.6	14.2	22.3	15.7	38.1	35.0	4	15.7	66.5	0.7
3/4"	mm	117.3	29.0	15.7	25.4	15.7	47.7	42.9	4	19.0	82.5	1.2
1"	mm	123.9	35.8	17.5	26.9	17.5	53.8	50.8	4	19.0	88.9	1.4
1.1/4"	mm	133.3	44.4	19.0	26.9	20.5	63.5	63.5	4	19.0	98.5	1.7
1.1/2"	mm	155.4	50.5	20.6	30.2	22.3	69.8	73.1	4	22.3	114.3	2.5
2"	mm	165.1	63.5	22.3	33.2	28.4	84.0	91.9	8	19.0	127.0	2.9
2.1/2"	mm	190.5	76.2	25.4	38.1	31.7	100.0	104.6	8	22.3	149.3	4.4
3"	mm	209.5	92.2	28.4	42.9	31.7	117.3	127.0	8	22.3	168.1	5.9
3.1/2"	mm	228.6	104.9	30.2	44.4	36.5	133.3	139.7	8	22.3	184.1	7.4
4"	mm	254.0	117.6	31.7	47.7	36.5	146.0	157.2	8	22.3	200.1	10
5"	mm	279.4	144.5	35.0	50.8	42.9	177.8	185.6	8	22.3	234.9	12.3
6"	mm	317.5	171.4	36.5	52.3	45.9	206.2	215.9	12	22.3	269.7	15.6
8"	mm	381.0	222.2	41.1	61.9	50.8	260.3	269.7	12	25.4	330.2	24.2
10"	mm	444.5	276.3	47.7	66.5	55.6	320.5	323.8	16	28.4	387.3	34.1

FITTACKS

300 Lbs

Threaded Flanges
ANSI B 16.5

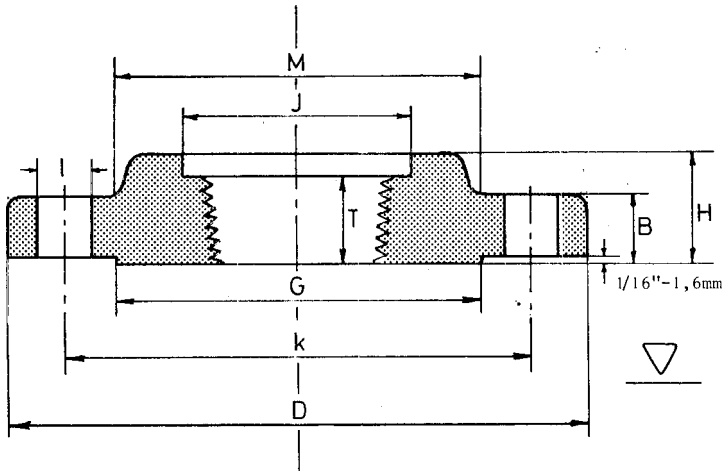

Nominal Pipe Size	mm	Outside Diam. D	Diam. of Bore J	Thick-ness Min. B	Length thru Hub H	Thread Length T	Diam. at Base of Hub M	O.D. of Raised Face G	Number of Holes	Diam of Holes I	Bolt Circle Diam. K	Approx Weight Kg
12"	mm	520.7	328.7	50.8	73.1	60.4	374.6	381.0	16	31.7	450.8	50
14"	mm	584.2	360.4	53.8	76.2	63.5	425.4	412.7	20	31.7	514.3	70
16"	mm	647.7	411.2	57.1	82.5	68.3	482.6	469.9	20	35.0	571.5	89
18"	mm	711.2	462.0	60.4	88.9	69.8	533.4	533.4	24	35.0	628.6	109
20"	mm	774.7	512.8	63.5	95.2	73.1	587.2	584.2	24	35.0	685.8	134
24"	mm	914.4	614.4	69.8	106.4	82.5	701.5	692.1	24	41.1	812.8	201

FITTACKS

600 Lbs

Threaded Flanges
ANSI B 16.5

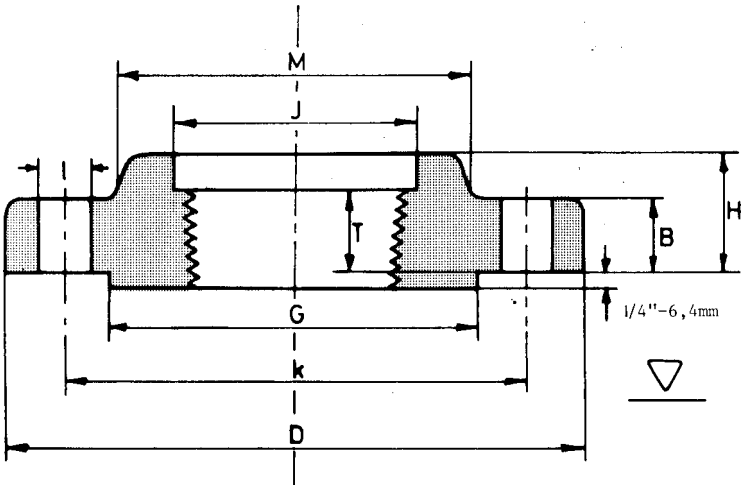

Nominal Pipe Size	mm	Outside Diam. D	Diam. of Bore J	Thick-ness Min. B	Length thru Hub H	Thread Length T	Diam. at Base of Hub M	O.D. of Raised Face G	Number of Holes	Diam of Holes I	Bolt Circle Diam. K	Approx Weight Kg
1/2"	mm	95.3	23.6	14.2	22.4	15.7	38.1	35.1	4	15.7	66.5	0.8
3/4"	mm	117.3	29.0	15.7	25.4	15.7	47.8	42.9	4	19.1	82.6	1.3
1"	mm	124.0	35.8	17.5	26.9	17.5	53.8	50.8	4	19.1	88.9	1.6
1.1/4"	mm	133.4	44.5	20.6	28.4	20.6	63.5	63.5	4	19.1	98.6	2.1
1.1/2"	mm	155.4	50.5	22.4	31.8	22.4	69.9	73.1	4	22.4	114.3	3.0
2"	mm	165.1	63.5	25.4	36.6	28.4	84.1	91.9	8	19.1	127.0	3.7
2.1/2"	mm	190.5	76.2	28.4	41.1	31.8	100.1	104.6	8	22.4	149.4	5.3
3"	mm	209.6	92.2	31.8	46.0	35.1	117.3	127.0	8	22.4	168.1	7.0
3.1/2"	mm	228.6	104.9	35.1	49.3	39.6	133.4	139.7	8	25.4	184.2	8.9
4"	mm	273.1	117.6	38.1	53.8	41.1	152.4	157.2	8	25.4	215.9	15
5"	mm	330.2	144.5	44.5	60.5	47.8	189.0	185.7	8	28.4	266.7	25
6"	mm	355.6	171.5	47.8	66.5	50.8	222.3	215.9	12	28.4	292.1	29
8"	mm	419.1	222.3	55.6	76.2	57.2	273.1	269.7	12	31.8	349.3	44
10"	mm	508.0	276.4	63.5	85.9	65.0	342.9	323.9	16	35.1	431.8	71

FITTACKS

600 Lbs

Threaded Flanges
ANSI B 16.5

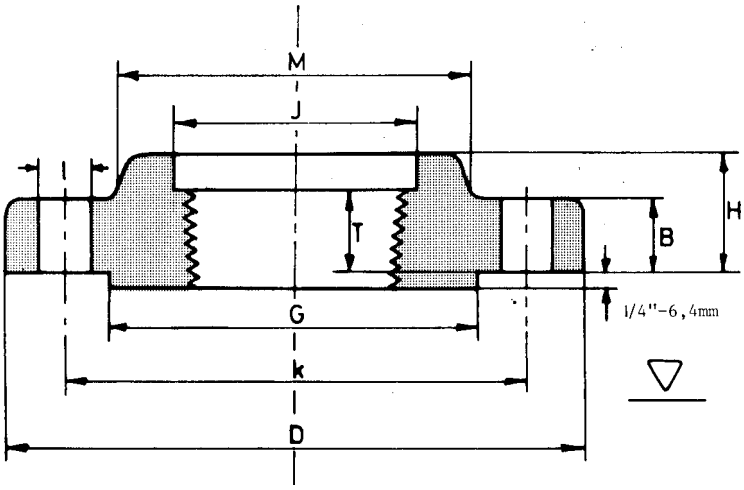

Nominal Pipe Size	mm	Outside Diam. D	Diam. of Bore J	Thick-ness Min. B	Length thru Hub H	Thread Length T	Diam. at Base of Hub M	O.D. of Raised Face G	Number of Holes	Diam of Holes I	Bolt Circle Diam. K	Approx Weight Kg
12"	mm	558.8	328.7	66.5	91.9	69.9	400.1	381.0	20	35.1	489.0	85
14"	mm	603.3	360.4	69.9	93.7	73.2	431.8	412.8	20	38.1	527.1	99
16"	mm	685.8	411.2	76.2	106.4	77.7	495.3	469.9	20	41.1	603.3	142
18"	mm	743.0	462.0	82.6	117.3	79.2	546.1	533.4	20	44.5	654.1	173
20"	mm	812.8	512.8	88.9	127.0	82.6	609.6	584.2	24	44.5	723.9	220
24"	mm	939.8	614.4	101.6	139.7	91.9	717.6	692.1	24	50.8	838.2	312

FITTACKS

900 Lbs

Threaded Flanges
ANSI B 16.5

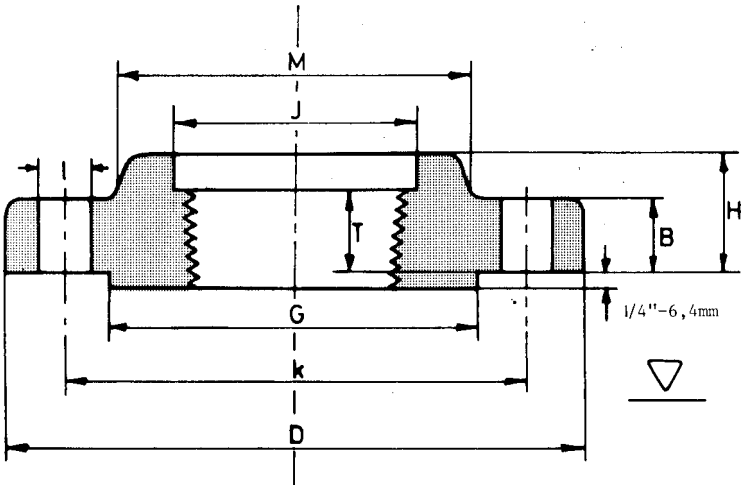

Nominal Pipe Size	mm	Outside Diam. D	Diam. of Bore J	Thick-ness Min. B	Length thru Hub H	Thread Length T	Diam. at Base of Hub M	O.D. of Raised Face G	Number of Holes	Diam of Holes I	Bolt Circle Diam. K	Approx Weight Kg
1/2"	mm	120.6	23.6	22.3	31.7	22.3	38.1	34.9	4	22.3	82.5	1.8
3/4"	mm	130.0	29.0	25.4	35.0	25.4	44.4	42.9	4	22.3	88.9	2.3
1"	mm	149.3	35.8	28.4	41.1	28.4	52.3	50.8	4	25.4	101.6	3.6
1.1/4"	mm	158.7	44.4	28.4	41.1	30.2	63.5	63.5	4	25.4	111.2	4.1
1.1/2"	mm	177.8	50.5	31.7	44.5	31.8	69.8	73.1	4	28.4	123.9	5.4
2"	mm	215.9	63.5	38.1	57.1	38.1	104.6	91.9	8	25.4	165.1	10
2.1/2"	mm	244.3	76.2	41.1	63.5	47.7	123.9	104.6	8	28.4	190.5	14
3"	mm	241.3	92.2	38.1	53.8	41.1	127.0	127.0	8	25.4	190.5	12
4"	mm	292.1	117.6	44.4	69.8	47.8	158.7	157.2	8	31.7	234.9	20
5"	mm	349.2	144.5	50.8	79.2	53.8	190.5	185.6	8	35.0	279.4	32
6"	mm	381.0	171.4	55.6	85.8	57.1	234.9	215.9	12	31.7	317.5	42
8"	mm	469.9	222.2	63.5	101.6	63.5	298.4	269.7	12	38.1	393.7	71
10"	mm	546.1	276.3	69.8	107.9	71.4	368.3	323.8	16	38.1	469.9	101
12"	mm	609.6	328.7	79.4	117.3	76.2	419.1	381.0	20	38.1	533.4	133

FITTACKS

900 Lbs

Threaded Flanges
ANSI B 16.5

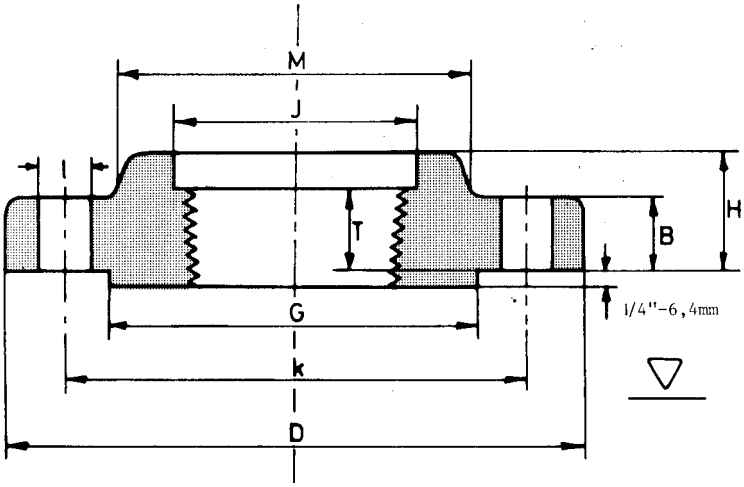

Nominal Pipe Size	mm	Outside Diam. D	Diam. of Bore J	Thick-ness Min. B	Length thru Hub H	Thread Length T	Diam. at Base of Hub M	O.D. of Raised Face G	Number of Holes	Diam of Holes I	Bolt Circle Diam. K	Approx Weight Kg
14"	mm	641.3	360.4	85.7	130.0	82.5	450.8	412.7	20	41.3	558.8	153
16"	mm	704.8	411.2	88.9	133.3	85.9	508.0	469.9	20	44.4	618.9	185
18"	mm	787.4	462.0	101.6	152.4	88.9	565.1	533.4	20	50.8	685.8	258
20"	mm	857.2	512.8	107.9	158.7	91.9	622.3	584.2	20	54.0	749.3	317
24"	mm	1041.4	614.4	139.7	203.2	101.6	749.3	692.1	20	66.5	901.7	606

FITTACKS

1500 Lbs

Threaded Flanges
ANSI B 16.5

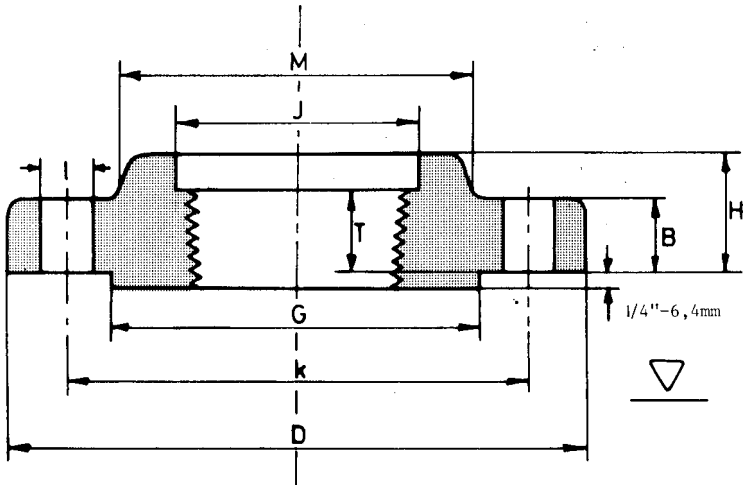

Nominal Pipe Size	mm	Outside Diam. D	Diam. of Bore J	Thick-ness Min. B	Length thru Hub H	Thread Length T	Diam. at Base of Hub M	O.D. of Raised Face G	Number of Holes	Diam of Holes I	Bolt Circle Diam. K	Approx Weight Kg
1/2"	mm	120.6	23.6	22.3	31.7	22.3	38.1	35.0	4	22.3	82.5	1.8
3/4"	mm	130.0	29.0	25.4	35.0	25.4	44.4	42.9	4	223	88.9	2.3
1"	mm	149.3	35.8	28.4	41.1	28.4	52.3	50.8	4	25.4	101.6	3.6
1.1/4"	mm	158.7	44.4	28.4	41.1	30.2	63.5	63.5	4	25.4	111.2	4
1.1/2"	mm	177.8	50.5	31.7	44.5	31.7	69.8	73.1	4	28.4	123.9	5.4
2"	mm	215.9	63.5	38.1	57.1	38.1	104.6	91.9	8	25.4	165.1	10
2.1/2"	mm	244.3	76.2	41.1	63.5	47.7	123.9	104.6	8	28.4	190.5	14
3"	mm	266.7	92.2	47.7	73.1	50.8	133.3	127.0	8	31.7	203.2	18
4"	mm	311.1	117.6	53.8	90.4	57.1	162.0	157.2	8	35.1	241.3	40
5"	mm	374.6	144.5	73.1	104.6	63.5	196.8	185.6	8	41.1	292.1	52
6"	mm	393.7	171.4	82.5	119.1	69.8	228.6	215.9	12	38.1	317.5	61
8"	mm	482.6	222.2	91.9	142.7	76.2	292.1	269.7	12	44.4	393.7	103
10"	mm	584.2	276.3	107.9	158.7	84.0	368.3	323.8	12	50.8	482.6	175
12"	mm	673.1	328.7	123.9	180.8	91.9	450.8	381.0	16	53.8	571.5	264

FITTACKS

2500 Lbs

Threaded Flanges
ANSI B 16.5

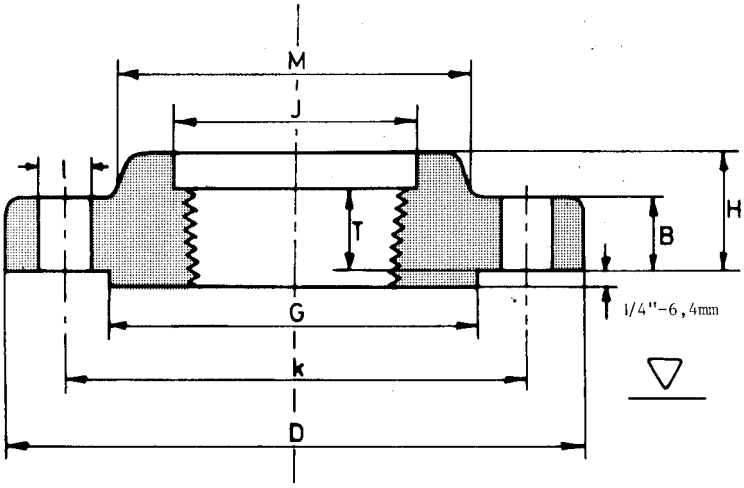

Nominal Pipe Size	mm	Outside Diam. D	Diam. of Bore J	Thick-ness Min. B	Length thru Hub H	Thread Length T	Diam. at Base of Hub M	O.D. of Raised Face G	Number of Holes	Diam of Holes I	Bolt Circle Diam. K	Approx Weight Kg
1/2"	mm	133.4	23.6	30.2	39.6	28.4	42.9	35.1	4	22.4	88.9	3
3/4"	mm	139.7	29.0	31.8	42.9	31.8	50.8	42.9	4	22.4	95.3	3.5
1"	mm	158.8	35.8	35.1	47.8	35.1	57.2	50.8	4	25.4	108.0	4.9
1.1/4"	mm	184.2	44.5	38.1	52.3	38.1	73.2	63.5	4	28.4	130.0	7.2
1.1/2"	mm	203.2	50.5	44.5	60.5	44.5	79.2	73.2	4	31.8	146.1	10
2"	mm	235.0	63.5	50.8	69.9	50.8	95.3	91.9	8	28.4	171.5	15
2.1/2"	mm	266.7	76.2	57.2	79.2	57.2	114.3	104.6	8	31.8	196.9	22
3"	mm	304.8	92.2	66.5	91.9	63.5	133.4	127.0	8	35.1	228.6	33
4"	mm	355.6	117.6	76.2	108.0	69.9	165.1	157.2	8	41.1	273.1	53
5"	mm	419.1	144.5	91.9	130.0	76.2	203.2	185.7	8	47.8	323.9	84
6"	mm	482.6	171.5	108.0	152.4	82.6	235.0	215.9	8	53.8	368.3	128
8"	mm	552.5	222.3	127.0	177.8	95.3	304.8	269.7	12	53.8	438.2	188
10"	mm	673.1	276.4	165.1	228.6	108.0	374.7	323.9	12	66.5	539.8	355
12"	mm	762.0	328.7	184.2	254.0	120.7	441.5	381.0	12	73.2	619.3	504

FITTACKS

150 Lbs

Long Welding Neck Flanges

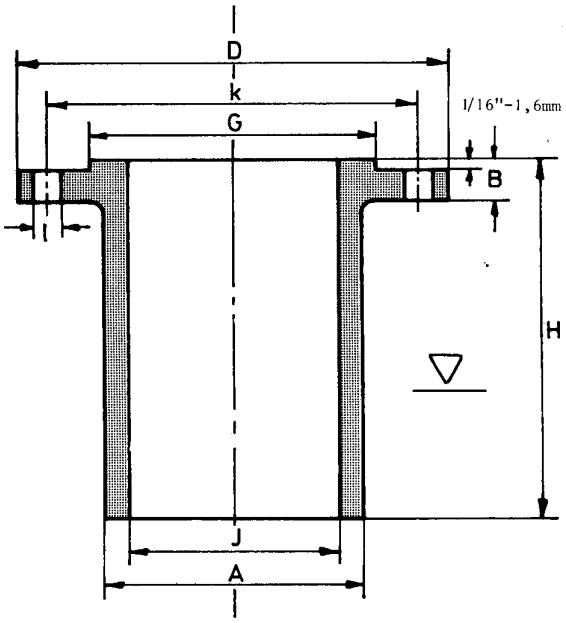

Nominal Pipe Size	mm	Outside Diameter D	Diam. of Bore J	Thick-ness Min. B	Length thru Hub H	Diam. Hub at Bevel A		O.D. of Raised Face G	Number of Holes	Diam of Holes I	Bolt Circle Diameter K	Approx Weight Kg
1"	mm	107.9	25.4	14.3	228.6	50.8		50.8	4	15.9	79.4	3.2
1.1/4"	mm	117.5	31.7	15.9	228.6	60.3		63.5	4	15.9	88.9	3.6
1.1/2"	mm	127.0	38.1	17.5	228.6	66.7		73.0	4	15.9	98.4	5.4
2"	mm	152.4	50.8	19.0	228.6	82.5		92.1	4	19.0	120.6	7.7
2.1/2"	mm	177.8	63.5	22.2	228.6	95.2		104.8	4	19.0	139.7	9.5
3"	mm	190.5	76.2	23.8	228.6	107.9		127.0	4	19.0	152.4	11.3
3.1/2"	mm	215.9	88.9	23.8	228.6	123.8		139.7	8	19.0	177.8	14
4"	mm	228.6	101.6	23.8	304.8	139.7		157.2	8	19.0	190.5	21.3
5"	mm	254.0	127.0	23.8	304.8	165.1		185.7	8	22.2	215.9	25.9
6"	mm	279.4	152.4	25.4	304.8	196.8		215.9	8	22.2	241.3	34.4
8"	mm	342.9	203.2	28.6	304.8	247.6		269.9	8	22.2	298.4	45.2
10"	mm	406.4	254.0	30.2	304.8	304.8		323.8	12	25.4	361.9	65.6
12"	mm	482.6	304.8	31.7	304.8	365.1		381.0	12	25.4	431.8	92.8
14"	mm	533.4	355.6	34.9	304.8	406.4		412.7	12	28.6	476.2	83.7

FITTACKS

150 Lbs

Long Welding Neck Flanges

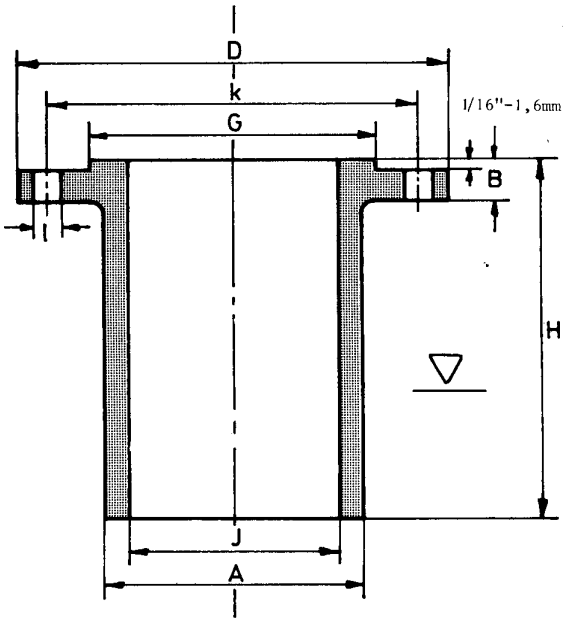

Nominal Pipe Size	mm	Outside Diameter D	Diam. of Bore J	Thick-ness Min. B	Length thru Hub H	Diam. Hub at Bevel A		O.D. of Raised Face G	Number of Holes	Diam of Holes I	Bolt Circle Diameter K	Approx Weight Kg
16"	mm	596.9	406.4	36.5	304.8	457.2		469.9	16	28.6	539.7	97
18"	mm	635.0	457.2	39.7	304.8	504.8		533.4	16	31.7	577.8	106
20"	mm	698.5	508.0	42.9	304.8	558.8		584.2	20	31.7	635.0	124
24"	mm	812.8	609.6	47.6	304.8	666.7		692.1	20	34.9	749.3	167

FITTACKS

300 Lbs

Long Welding Neck Flanges

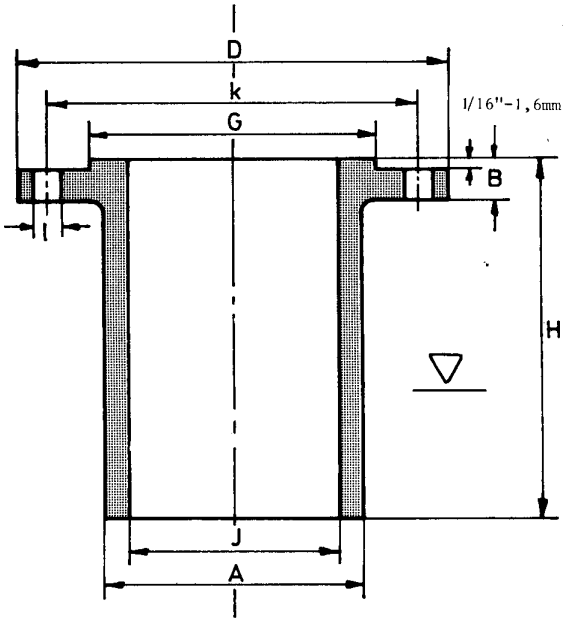

Nominal Pipe Size	mm	Outside Diameter D	Diam. of Bore J	Thick-ness Min. B	Length thru Hub H	Diam. Hub at Bevel A		O.D. of Raised Face G	Number of Holes	Diam of Holes I	Bolt Circle Diameter K	Approx Weight Kg
1"	mm	123.8	25.4	17.5	228.6	54.0		50.8	4	19.0	88.9	4.5
1.1/4"	mm	133.3	31.7	19.0	228.6	63.5		63.5	4	19.0	98.4	5.4
1.1/2"	mm	155.6	38.1	20.6	228.6	69.8		73.0	4	22.2	114.3	6.8
2"	mm	165.1	50.8	22.2	228.6	82.5		92.1	8	19.0	127.0	8.6
2.1/2"	mm	190.5	63.5	25.4	228.6	100.0		104.8	8	22.2	149.2	11.7
3"	mm	209.5	76.2	28.6	228.6	117.5		127.0	8	22.2	168.3	15.4
3.1/2"	mm	228.6	88.9	30.2	228.6	133.3		139.7	8	22.2	184.1	19.5
4"	mm	254.0	101.6	31.8	304.8	146.0		157.2	8	22.2	200.0	28
5"	mm	279.4	127.0	34.9	304.8	177.8		185.7	8	22.2	234.9	37.6
6"	mm	317.5	152.4	36.5	304.8	206.4		215.9	12	22.2	269.9	47.5
8"	mm	381.0	203.2	41.3	304.8	260.3		269.9	12	25.4	330.2	68
10"	mm	444.5	254.0	47.6	304.8	320.7		323.8	16	28.6	387.3	95
12"	mm	520.7	304.8	50.8	304.8	374.6		381.0	16	31.7	450.8	124
14"	mm	584.2	355.6	54.0	304.8	425.4		412.7	20	31.7	514.3	130

FITTACKS

300 Lbs

Long Welding Neck Flanges

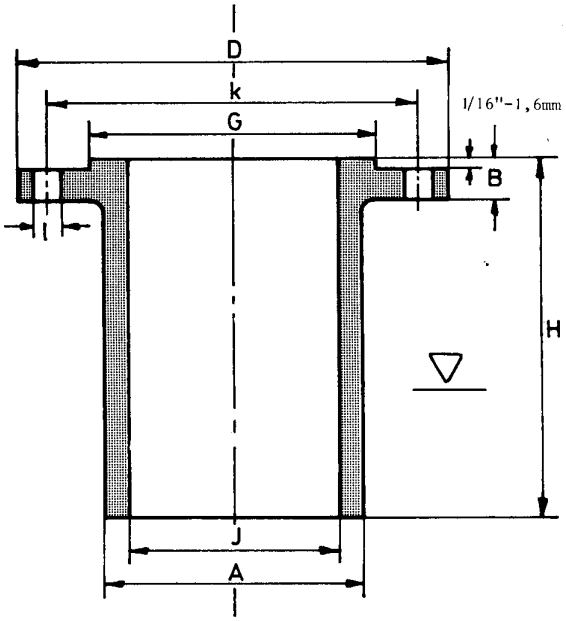

Nominal Pipe Size	mm	Outside Diameter D	Diam. of Bore J	Thick-ness Min. B	Length thru Hub H	Diam. Hub at Bevel A		O.D. of Raised Face G	Number of Holes	Diam of Holes I	Bolt Circle Diameter K	Approx Weight Kg
16"	mm	647.7	406.4	57.1	304.8	482.6		469.9	20	34.9	571.5	160
18"	mm	711.2	457.2	60.3	304.8	533.4		533.4	24	34.9	628.6	185
20"	mm	774.7	508.0	63.5	304.8	587.4		584.2	24	34.9	685.8	210
24"	mm	914.4	609.6	69.8	304.8	701.7		692.1	24	41.3	812.8	316

FITTACKS

600 Lbs

Long Welding Neck Flanges

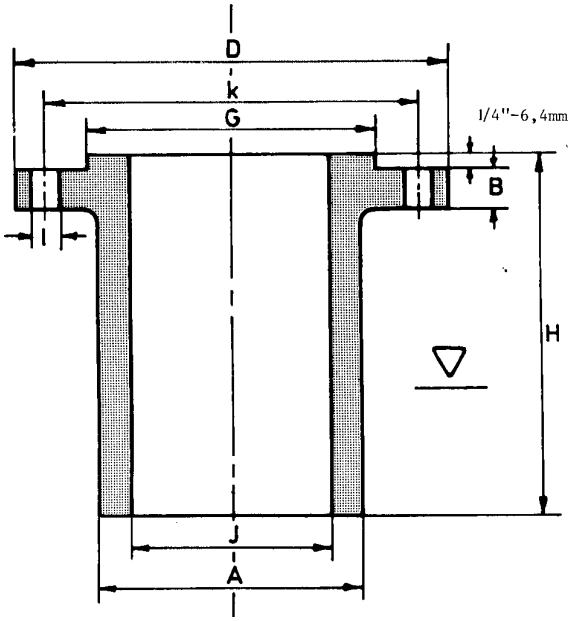

* = to be specified

Nominal Pipe Size	mm	Outside Diameter D	Diam. of Bore J	Thick-ness Min. B	Length thru Hub H	Diam. Hub at Bevel A		O.D. of Raised Face G	Number of Holes	Diam of Holes I	Bolt Circle Diameter K	Approx Weight Kg
1"	mm	123.8	25.4	17.5	228.6	54.0		50.8	4	19.0	88.9	4.5
1.1/4"	mm	133.3	31.7	20.6	228.6	63.5		63.5	4	19.0	98.4	5.8
1.1/2"	mm	155.6	38.1	22.2	228.6	69.8		73.0	4	22.2	114.3	7.2
2"	mm	165.1	50.8	25.4	228.6	82.5		92.1	8	19.0	127.0	9
2.1/2"	mm	190.5	63.5	28.6	228.6	100.0		104.8	8	22.2	149.2	12.2
3"	mm	209.5	76.2	31.7	228.6	117.5		127.0	8	22.2	168.3	16.3
3.1/2"	mm	228.6	88.9	34.9	228.6	133.3		139.7	8	25.4	184.1	20.4
4"	mm	273.0	101.6	38.1	304.8	152.4		157.2	8	25.4	215.9	34.8
5"	mm	330.2	127.0	44.4	304.8	190.5		185.7	8	28.6	266.7	56.5
6"	mm	355.6	152.4	47.6	304.8	222.2		215.9	12	28.6	292.1	68
8"	mm	419.1	203.2	55.6	304.8	273.0		269.9	12	31.7	349.2	92.7
10"	mm	508.0	254.0	63.5	304.8	342.9		323.8	16	34.9	431.8	147
12"	mm	558.8	304.8	66.7	304.8	400.0		381.0	20	34.9	488.9	178
14"	mm	603.2	355.6	69.8	*	431.8		412.7	20	38.1	527.0	

FITTACKS

600 Lbs

Long Welding Neck Flanges

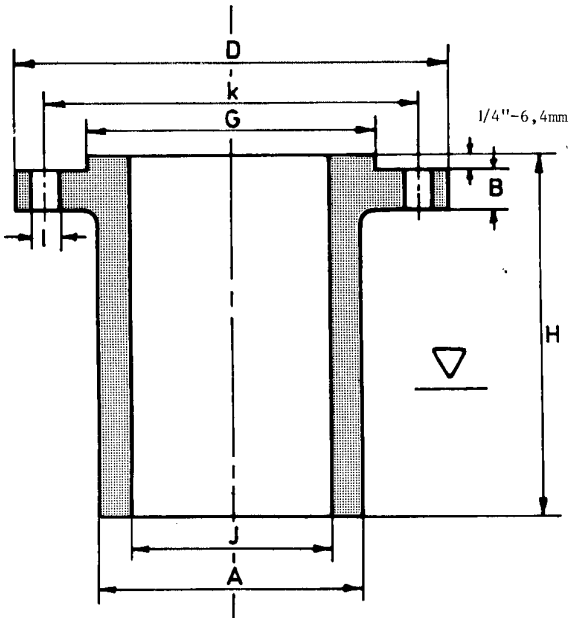

* = to be specified

Nominal Pipe Size	mm	Outside Diameter D	Diam. of Bore J	Thick-ness Min. B	Length thru Hub H	Diam. Hub at Bevel A		O.D. of Raised Face G	Number of Holes	Diam of Holes I	Bolt Circle Diameter K	Approx Weight Kg
16"	mm	685.8	406.4	76.2	*	495.3		469.9	20	41.3	603.2	
18"	mm	742.9	457.2	82.5	*	546.1		533.4	20	44.4	654.0	
20"	mm	812.8	508.0	88.9	*	609.6		584.2	24	44.4	723.9	
24"	mm	939.8	609.6	101.6	*	717.5		692.1	24	50.8	838.2	

FITTACKS

900 Lbs

Long Welding Neck Flanges

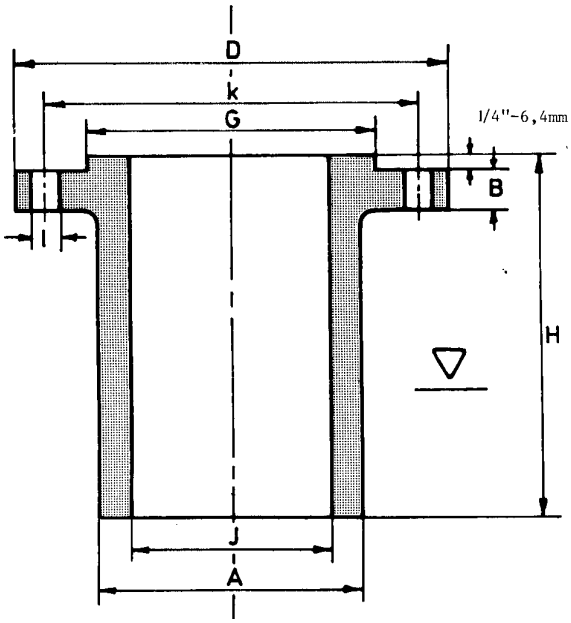

* = to be specified

Nominal Pipe Size	mm	Outside Diameter D	Diam. of Bore J	Thick-ness Min. B	Length thru Hub H	Diam. Hub at Bevel A		O.D. of Raised Face G	Number of Holes	Diam of Holes I	Bolt Circle Diameter K	Approx Weight Kg
1"	mm	149.2	25.4	28.6	228.6	52.4		50.8	4	25.4	101.6	5.9
1.1/4"	mm	158.7	31.7	28.6	228.6	63.5		63.5	4	25.4	111.1	7.7
1.1/2"	mm	177.8	38.1	31.7	228.6	69.8		73.0	4	28.6	123.8	9.5
2"	mm	215.9	50.8	38.1	228.6	104.8		92.1	8	25.4	165.1	19
2.1/2"	mm	244.5	63.5	41.3	304.8	123.8		104.8	8	28.6	190.5	30.2
3"	mm	241.3	76.2	38.1	304.8	127.0		127.0	8	25.4	190.5	28
4"	mm	292.1	101.6	44.4	304.8	158.7		157.2	8	31.7	234.9	42
5"	mm	349.2	127.0	50.8	304.8	190.5		185.7	8	34.9	279.4	61
6"	mm	381.0	152.4	55.6	304.8	234.9		215.9	12	31.7	317.5	77
8"	mm	469.9	203.2	63.5	304.8	298.4		269.9	12	38.1	393.7	133
10"	mm	546.1	254.0	69.8	406.4	368.3		323.8	16	38.1	469.9	236
12"	mm	609.6	304.8	79.4	406.4	419.1		381.0	20	38.1	533.4	290
14"	mm	641.2	355.6	85.7	*	450.8		412.7	20	41.3	558.8	
16"	mm	704.8	406.4	88.9	*	508.0		469.9	20	44.4	615.9	

FITTACKS

900 Lbs

Long Welding Neck Flanges

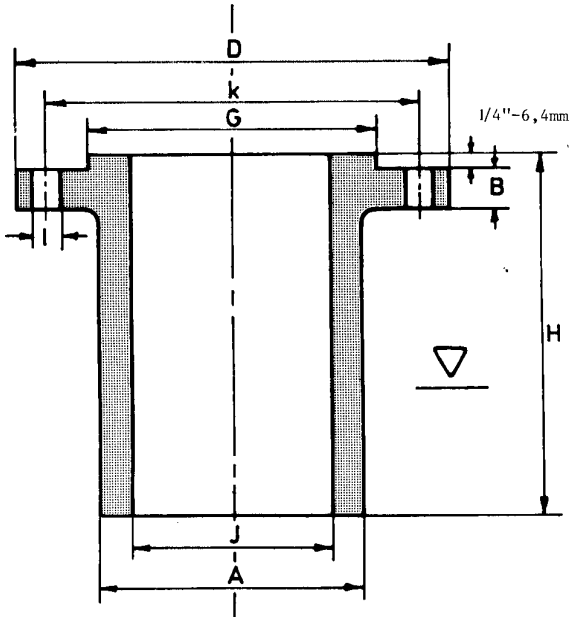

* = to be specified

Nominal Pipe Size	mm	Outside Diameter D	Diam. of Bore J	Thick-ness Min. B	Length thru Hub H	Diam. Hub at Bevel A		O.D. of Raised Face G	Number of Holes	Diam of Holes I	Bolt Circle Diameter K	Approx Weight Kg
18"	mm	787.4	457.2	101.6	*	565.1		533.4	20	50.8	685.8	
20"	mm	857.2	508.0	107.9	*	622.3		584.2	20	54.0	749.3	
24"	mm	1041.4	609.6	139.7	*	749.3		692.1	20	66.7	901.7	

FITTACKS

1500 Lbs

Long Welding Neck Flanges

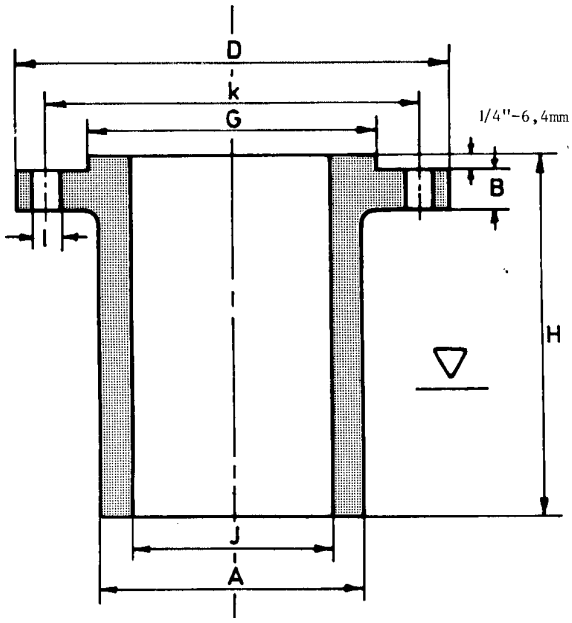

* = to be specified

Nominal Pipe Size	mm	Outside Diameter D	Diam. of Bore J	Thick-ness Min. B	Length thru Hub H	Diam. Hub at Bevel A		O.D. of Raised Face G	Number of Holes	Diam of Holes I	Bolt Circle Diameter K	Approx Weight Kg
1"	mm	149.2	25.4	28.6	228.6	52.4		50.8	4	25.4	101.6	5.9
1.1/4"	mm	158.7	31.7	28.6	228.6	63.5		63.5	4	25.4	111.1	7.7
1.1/2"	mm	177.8	38.1	31.7	228.6	69.8		73.0	4	28.6	123.8	9.5
2"	mm	215.9	50.8	38.1	228.6	104.8		92.1	8	25.4	165.1	19
2.1/2"	mm	244.5	63.5	41.3	304.8	123.8		104.8	8	28.6	190.5	30.2
3"	mm	266.7	76.2	47.6	304.8	133.3		127.0	8	31.7	203.2	35.4
4"	mm	311.1	101.6	54.0	304.8	161.9		157.2	8	34.9	241.3	49.7
5"	mm	374.6	127.0	73.0	304.8	196.8		185.7	8	41.3	292.1	81.5
6"	mm	393.7	152.4	82.5	304.8	228.6		215.9	12	38.1	317.5	97
8"	mm	482.6	203.2	92.1	304.8	292.1		269.9	12	44.4	393.7	152
10"	mm	584.2	254.0	107.9	406.4	368.3		323.8	12	50.8	482.6	294
12"	mm	673.1	304.8	123.8	406.4	405.8		381.0	16	54.0	571.5	425
14"	mm	749.3	355.6	133.3	*	495.3		412.7	16	60.3	635.0	
16"	mm	825.5	406.4	146.0	*	552.4		469.9	16	66.7	704.8	

FITTACKS

1500 Lbs

Long Welding Neck Flanges

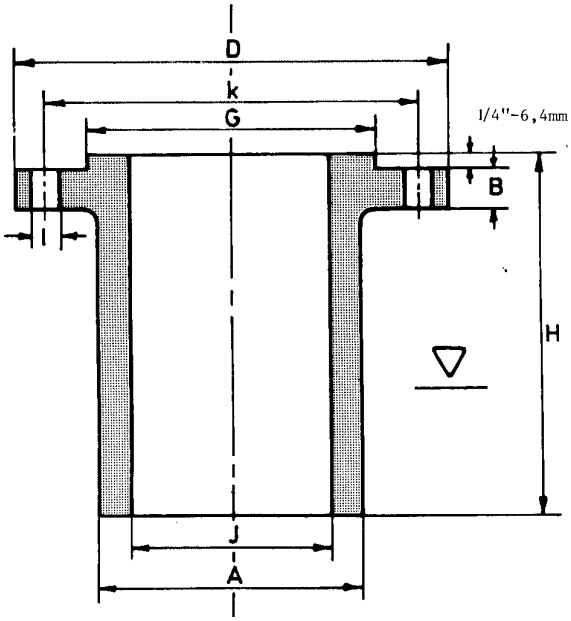

* = to be specified

Nominal Pipe Size	mm	Outside Diameter D	Diam. of Bore J	Thick-ness Min. B	Length thru Hub H	Diam. Hub at Bevel A		O.D. of Raised Face G	Number of Holes	Diam of Holes I	Bolt Circle Diameter K	Approx Weight Kg
18"	mm	914.4	457.2	161.9	*	596.9		533.4	16	73.0	774.7	
20"	mm	984.2	508.0	177.8	*	641.2		584.2	16	79.4	831.8	
24"	mm	1168.4	609.6	203.2	*	762.0		692.1	16	92.1	990.6	

FITTACKS

2500 Lbs

Long Welding Neck Flanges

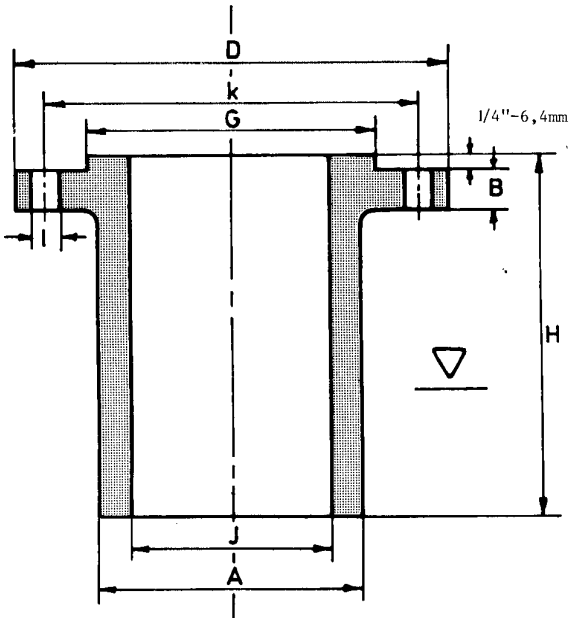

* = to be specified

Nominal Pipe Size	mm	Outside Diameter D	Diam. of Bore J	Thick-ness Min. B	Length thru Hub H	Diam. Hub at Bevel A		O.D. of Raised Face G	Number of Holes	Diam of Holes I	Bolt Circle Diameter K	Approx Weight Kg
1"	mm	158.7	25.4	34.9	228.6	57.1		50.8	4	25.4	107.9	8.1
1.1/4"	mm	184.1	31.7	38.1	228.6	73.0		63.5	4	28.6	130.2	11.8
1.1/2"	mm	203.2	38.1	44.4	228.6	79.4		73.0	4	31.7	146.0	15.4
2"	mm	234.9	50.8	50.8	228.6	95.2		92.1	8	28.6	171.4	21
2.1/2"	mm	266.7	63.5	57.1	304.8	114.3		104.8	8	31.7	196.8	34.4
3"	mm	304.8	76.2	66.7	304.8	133.3		127.0	8	34.9	228.6	49.8
4"	mm	355.6	101.6	76.2	304.8	165.1		157.2	8	41.3	273.0	72.5
5"	mm	419.1	127.0	92.1	304.8	203.2		185.7	8	47.6	323.8	113
6"	mm	482.6	152.4	107.9	304.8	234.9		215.9	8	54.0	368.3	163
8"	mm	552.4	203.2	127.0	304.8	304.8		269.9	12	54.0	438.1	236
10"	mm	673.1	254.0	165.1	406.4	374.6		323.8	12	66.7	539.7	452
12"	mm	762.0	304.8	184.1	406.4	441.3		381.0	12	73.0	619.1	610

FITTACKS

300 Lbs

Orifice Welding Neck Flanges
ASME B 16.36

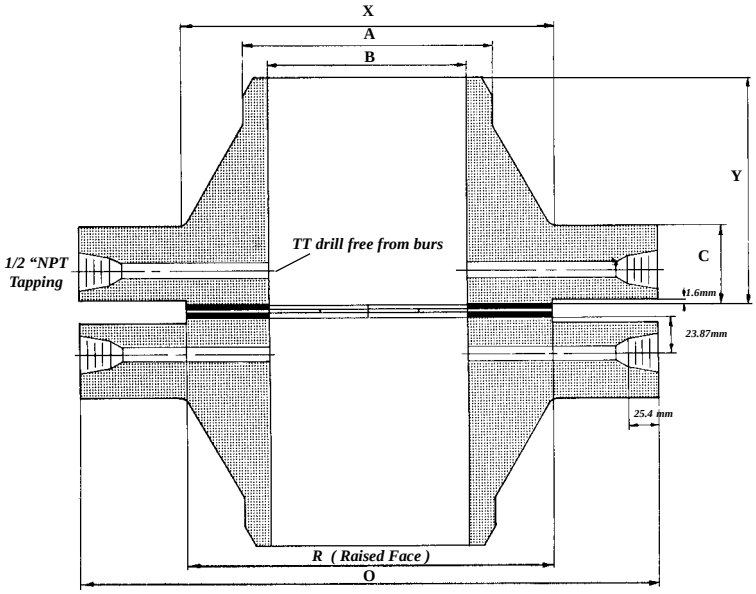

Diameter B to be specified

Nominal Pipe Size Inches	O.D. Raised Face R	Outside Diam. O	Thick-ness Min. C	Length thru Hub Y	Diam. at Base of Hub X	Diam. Hub at Bevel A	Diam. Connection TT	Bolt Circle Diam.	Number of Holes	Diam of Holes	Jack Screw sizes RF	Jack Screw Length	Jack Screw sizes RTJ	Jack Screw Length
1"	50.8	124.0	38.1	82.6	53.9	33.6	6.4	88.9	4	17.6	5/8	2.¾	5/8	3.¾
1.½"	73.2	155.5	38.1	85.9	69.9	48.3	6.4	114.3	4	20.6	5/8	2.¾	5/8	3.¾
2"	92.0	165.1	38.1	85.9	84.1	60.5	6.4	127.0	8	17.6	5/8	2.¾	5/8	3.¾
2.½"	104.7	190.5	38.1	88.9	100.1	73.2	6.4	149.3	8	20.6	5/8	2.¾	¾	3.¾
3"	127.0	209.6	38.1	88.9	117.4	88.9	9.6	168.2	8	20.6	¾	2.¾	¾	3.¾
4"	157.2	254.0	38.1	92.0	146.1	114.3	12.7	200.2	8	20.6	¾	2.¾	¾	3.¾
6"	215.9	317.5	38.1	100.1	206.3	168.4	12.7	269.8	12	22.4	¾	2.¾	¾	4
8"	269.8	381.0	41.2	111.3	260.4	219.2	12.7	330.2	12	25.4	¾	3	¾	4.1/4
10"	323.9	444.5	47.8	117.4	320.6	273.1	12.7	387.4	16	28.5	1	3.½	1	4.½
12"	381.0	520.7	50.8	130.1	374.7	323.9	12.7	450.9	16	31.8	1	3.½	1	4.½
14"	412.8	584.2	53.9	142.8	425.5	355.6	12.7	514.4	20	31.8	1	3.½	1	5
16"	469.9	647.7	57.2	146.1	482.6	406.4	12.7	571.5	20	35.1	1	3.½	1	5
18"	533.4	711.2	60.5	158.8	533.4	457.2	12.7	628.7	24	35.1	1	3.¾	1	5
20"	584.2	774.7	63.5	162.1	587.3	508.0	12.7	685.8	24	35.1	1	3.¾	1	5.½
24"	692.2	914.4	69.9	168.2	701.6	609.6	12.7	812.8	24	41.2	1	4	1	5.½

FITTACKS

600 Lbs

Orifice Welding Neck Flanges
ASME B 16.36

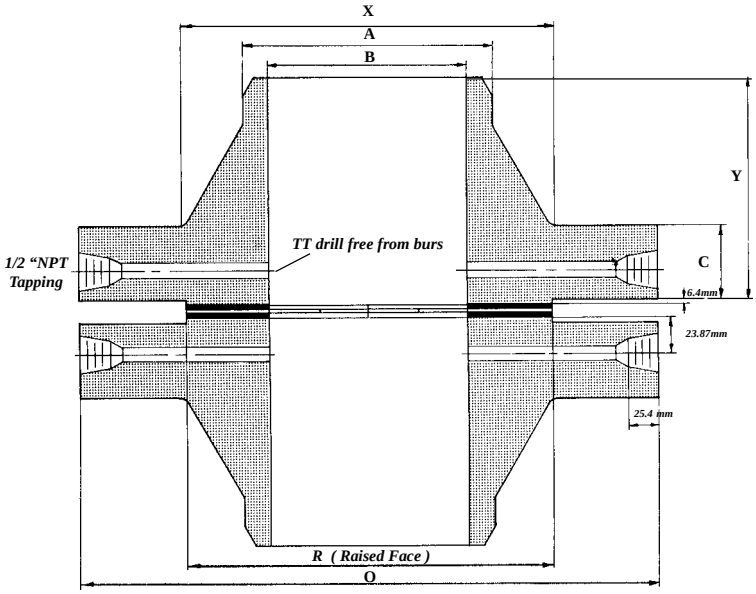

Diameter B to be specified

Nominal Pipe Size Inches	O.D. Raised Face R	Outside Diam. O	Thick-ness Min. C	Length thru Hub Y	Diam. at Base of Hub X	Diam. Hub at Bevel A	Diam. Connection TT	Bolt Circle Diam.	Number of Holes	Diam of Holes	Jack Screw sizes RF	Jack Screw Length	Jack Screw sizes RTJ	Jack Screw Length
1"	50.8	124.0	36.6	81.1	53.9	33.6	6.4	88.9	4	17.6	5/8	2.¾	5/8	3.¾
1.½"	73.2	155.5	36.6	84.4	69.9	48.3	6.4	114.3	4	20.6	5/8	2.¾	5/8	3.¾
2"	92.0	165.1	36.6	84.4	84.1	60.5	6.4	127.0	8	17.6	5/8	2.¾	5/8	3.¾
2.½"	104.7	190.5	36.6	87.4	100.1	73.2	6.4	149.3	8	20.6	¾	2.¾	¾	3.¾
3"	127.0	209.6	36.6	87.4	117.4	88.9	9.6	168.2	8	20.6	¾	2.¾	¾	3.¾
4"	157.2	273.1	38.1	101.6	152.4	114.3	12.7	215.9	8	25.4	¾	3.1/4	¾	4
6"	215.9	355.6	47.8	117.4	222.3	168.4	12.7	292.1	12	28.5	7/8	4	7/8	4.½
8"	269.8	419.1	55.7	133.4	273.1	219.2	12.7	349.3	12	31.8	7/8	4	7/8	5
10"	323.9	508.0	63.5	152.4	342.9	273.1	12.7	431.8	16	35.1	7/8	4.½	7/8	5
12"	381.0	558.8	66.6	155.5	400.1	323.9	12.7	489.0	20	35.1	7/8	4.½	7/8	5.½
14"	412.8	603.3	69.9	165.1	431.8	355.6	12.7	527.1	20	38.1				
16"	469.9	685.8	76.2	177.8	495.3	406.4	12.7	603.3	20	41.2				
18"	533.4	743.0	82.6	184.2	546.1	457.2	12.7	654.1	20	44.5				
20"	584.2	812.8	88.9	190.5	609.6	508.0	12.7	723.9	24	44.5				
24"	692.2	939.8	101.6	203.2	717.6	609.6	12.7	838.2	24	50.8				

FITTACKS

900 Lbs

Orifice Welding Neck Flanges
ASME B 16.36

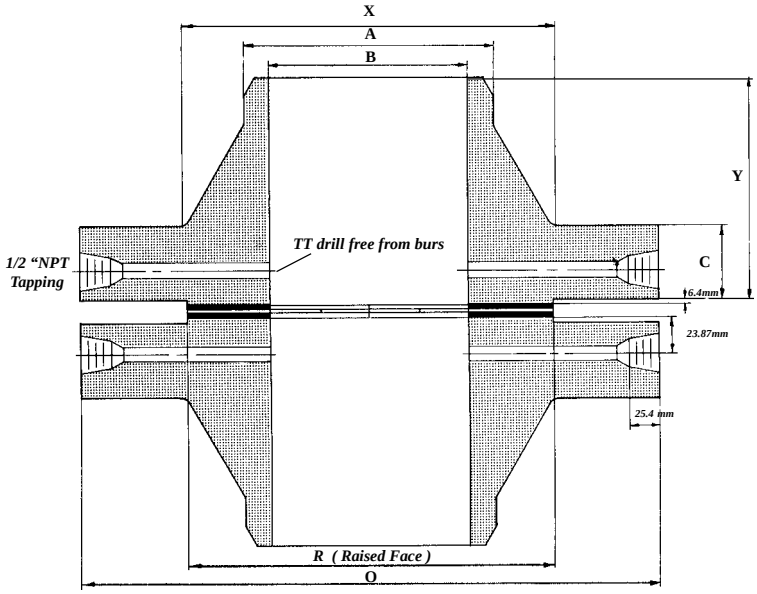

Diameter B to be specified

Nominal Pipe Size Inches	O.D. Raised Face R	Outside Diam. O	Thick-ness Min. C	Length thru Hub Y	Diam. at Base of Hub X	Diam. Hub at Bevel A	Diam. Connection TT	Bolt Circle Diam.	Number of Holes	Diam of Holes	Jack Screw sizes RF	Jack Screw Length	Jack Screw sizes RTJ	Jack Screw Length
1"	50.8	149.4	38.1	82.6	52.4	33.6	6.4	101.6	4	25.4	5/8	3.1/4	5/8	3.¾
1.½"	73.2	177.8	38.1	88.9	69.9	48.3	6.4	124.0	4	28.5	5/8	3.1/4	5/8	3.¾
2"	92.0	215.9	38.1	101.6	104.7	60.5	6.4	165.1	8	25.4	5/8	3.1/4	5/8	4
2.½"	104.7	244.4	41.2	104.7	124.0	73.2	6.4	190.5	8	28.5	5.8	3.½	5/8	4.1/4
3"	127.0	241.3	38.1	101.6	127.0	88.9	9.6	190.5	8	25.4	¾	3.1/4	¾	4
4"	157.2	292.1	44.5	114.3	158.8	114.3	12.7	235.0	8	31.8	¾	3.½	¾	4.1/4
6"	215.9	381.0	55.7	139.7	235.0	168.4	12.7	317.5	12	31.8	1	4	1	5
8"	269.8	469.9	63.5	162.1	298.5	219.2	12.7	393.7	12	38.1	1	4	1	5
10"	323.9	546.1	69.9	184.2	368.3	273.1	12.7	469.9	16	38.1	1	4.½	1	5.½
12"	381.0	609.6	79.3	200.2	419.1	323.9	12.7	533.4	20	38.1	1	4.½	1	6
14"	412.8	641.4	85.9	212.9	450.9	355.6	12.7	558.8	20	41.2				
16"	469.9	704.9	88.9	215.9	508.0	406.4	12.7	616.0	20	44.5				
18"	533.4	787.4	101.6	228.6	565.2	457.2	12.7	685.8	20	50.8				
20"	584.2	857.3	108.0	247.7	622.3	508.0	12.7	749.3	20	53.9				
24"	692.2	1041.4	139.7	292.1	749.3		12.7	901.7	20	66.6				

FITTACKS

1500 Lbs

Orifice Welding Neck Flanges
ASME B 16.36

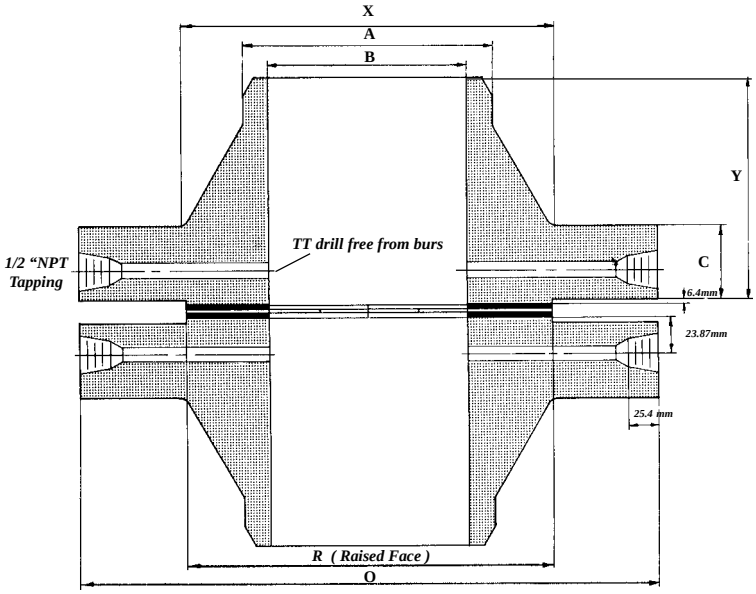

Diameter B to be specified

Nominal Pipe Size Inches	O.D. Raised Face R	Outside Diam. O	Thick-ness Min. C	Length thru Hub Y	Diam. at Base of Hub X	Diam. Hub at Bevel A	Diam. Connection TT	Bolt Circle Diam.	Number of Holes	Diam of Holes	Jack Screw sizes RF	Jack Screw Length	Jack Screw sizes RTJ	Jack Screw Length
1"	50.8	149.4	38.1	82.6	52.4	33.6	6.4	101.6	4	25.4	5/8	3.1/4	5/8	3.¾
1.½"	73.2	177.8	38.1	88.9	69.9	48.3	6.4	124.0	4	28.5	5/8	3.1/4	5/8	3.¾
2"	92.0	215.9	38.1	101.6	104.7	60.5	6.4	165.1	8	25.4	5/8	3.1/4	5/8	4
2.½"	104.7	244.4	41.2	104.7	124.0	73.2	6.4	190.5	8	28.5	5/8	3.½	5/8	4.1/4
3"	127.0	266.7	47.8	117.4	133.4	88.9	9.6	203.2	8	31.8	3/4	3.¾	¾	4.½
4"	157.2	311.2	53.9	124.0	162.1	114.3	12.7	241.3	8	35.1	3/4	4	¾	5
6"	215.9	393.7	82.6	171.5	228.6	168.4	12.7	317.5	12	38.1	1	5	1	6
8"	269.8	482.6	92.0	212.9	292.1	219.2	12.7	393.7	12	44.5	1	5.½	1	7
10"	323.9	584.2	108.0	254.0	368.3	273.1	12.7	482.6	12	50.8	1	6	1	7
12"	381.0	673.1	124.0	282.5	450.9	323.9	12.7	571.5	16	53.9	1	7	1	8
14"	412.8	749.3	133.4	298.5	495.3	355.6	12.7	635.0	16	60.5				
16"	469.9	825.5	146.1	311.2	552.5	406.4	12.7	704.9	16	66.6				
18"	533.4	914.4	162.1	327.2	596.9	457.2	12.7	774.7	16	73.2				
20"	584.2	984.3	177.8	355.6	641.4	508.0	12.7	831.9	16	79.3				
24"	692.2	1168.4	203.2	406.4	762.0	609.6	12.7	990.6	16	92.0				

FITTACKS

2500 Lbs

Orifice Welding Neck Flanges
ASME B 16.36

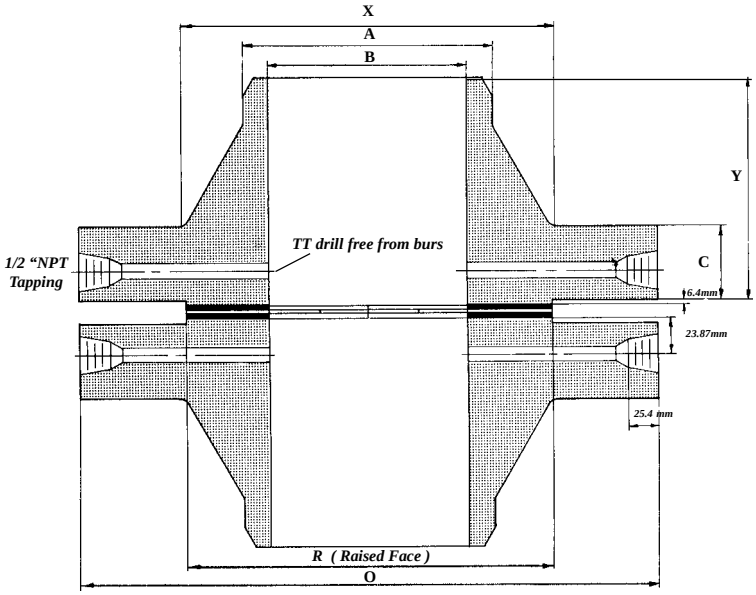

Diameter B to be specified

Nominal Pipe Size Inches	O.D. Raised Face R	Outside Diam. O	Thick-ness Min. C	Length thru Hub Y	Diam. at Base of Hub X	Diam. Hub at Bevel A	Diam. Connection TT	Bolt Circle Diam.	Number of Holes	Diam of Holes	Jack Screw sizes RF	Jack Screw Length	Jack Screw sizes RTJ	Jack Screw Length
1"	50.8	158.8	38.1	92.0	57.2	33.6	6.4	108.0	4	25.4				
1.1/2	73.2	203.2	44.5	111.3	79.3	48.3	6.4	146.1	4	31.8				
2"	92.0	235.0	50.8	127.0	95.3	60.5	6.4	171.5	8	28.5				
2.1/2	104.7	266.7	57.2	142.8	114.3	73.2	6.4	196.9	8	31.8				
3"	127.0	304.8	66.6	168.2	133.4	88.9	9.6	228.6	8	35.1				
4"	157.2	355.6	76.2	190.5	165.1	114.3	12.7	273.1	8	41.2				
6"	215.9	482.6	108.0	273.1	235.0	168.4	12.7	368.3	8	53.9				
8"	269.8	552.5	127.0	317.5	304.8	219.2	12.7	438.2	12	53.9				
10"	323.9	673.1	165.1	419.1	374.7	273.1	12.7	539.8	12	66.6				
12"	381.0	762.0	184.2	463.6	441.5	323.9	12.7	619.3	12	73.2				

FITTACKS

150Lbs

Welding Neck Flanges
Asme B 16.47 Series A

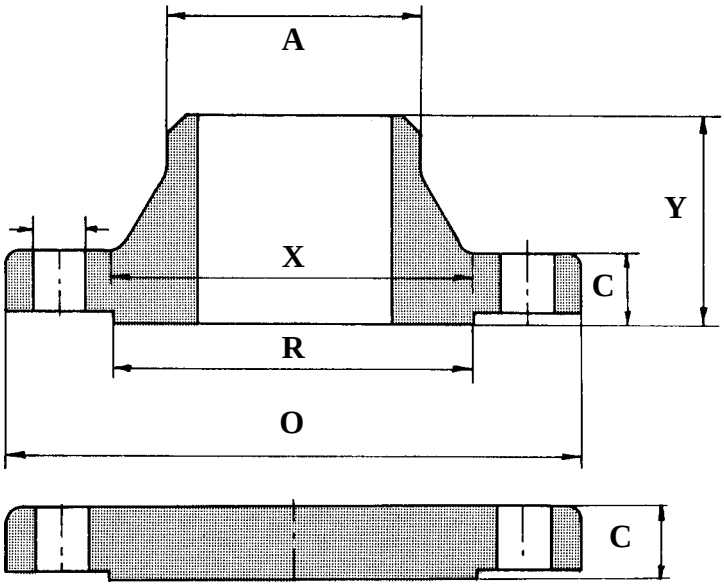

Nominal Pipe Size	Outside Diam. O	Thick-ness WNF C	Thick-ness Blind C	Length thru Hub Y	Diam. at Base of Hub X	Diam. Hub at Bevel A	O.D. of Race Face R	Bolt Circle Diameter	Number of Holes	Diam of Holes	Diam. of Bolt in inch	Radius at base of Hub
26"	870.0	68.3	68.3	120.7	676.1	660.4	749.3	806.5	24	35.1	1.1/4	9.7
28"	927.1	71.4	71.4	125.5	726.9	711.2	800.1	863.6	28	35.1	1.1/4	11.2
30"	984.3	74.7	74.7	136.7	781.1	762.0	857.3	914.4	28	35.1	1.1/4	11.2
32"	1060.5	81.0	81.0	144.5	831.9	812.8	914.4	977.9	28	41.1	1.1/2	11.2
34"	1111.3	82.6	82.6	149.4	882.7	863.6	965.2	1028.7	32	41.1	1.1/2	12.7
36"	1168.4	90.4	90.4	157.2	933.5	914.4	1022.4	1085.9	32	41.1	1.1/2	12.7
38"	1238.3	87.4	87.4	157.2	990.6	965.2	1073.2	1149.4	32	41.1	1.1/2	12.7
40"	1289.1	90.4	90.4	163.6	1041.4	1016.0	1124.0	1200.2	36	41.1	1.1/2	12.7
42"	1346.2	96.8	96.8	171.5	1092.2	1066.8	1193.8	1257.3	36	41.1	1.1/2	12.7
44"	1403.4	101.6	101.6	177.8	1143.0	1117.6	1244.6	1314.5	40	41.1	1.1/2	12.7
46"	1454.2	103.1	103.1	185.7	1196.8	1168.4	1295.4	1365.3	40	41.1	1.1/2	12.7
48"	1511.3	108.0	108.0	192.0	1247.6	1219.2	1358.9	1422.4	44	41.1	1.1/2	12.7
50"	1568.5	111.3	111.3	203.2	1301.8	1270.0	14.9.7	1479.6	44	47.8	1.3/4	12.7
52"	1625.6	115.8	115.8	209.6	1352.6	1320.8	1460.5	1536.7	44	47.8	1.3/4	12.7

FITTACKS

150 Lbs

Welding Neck Flanges
Asme B 16.47 Series A

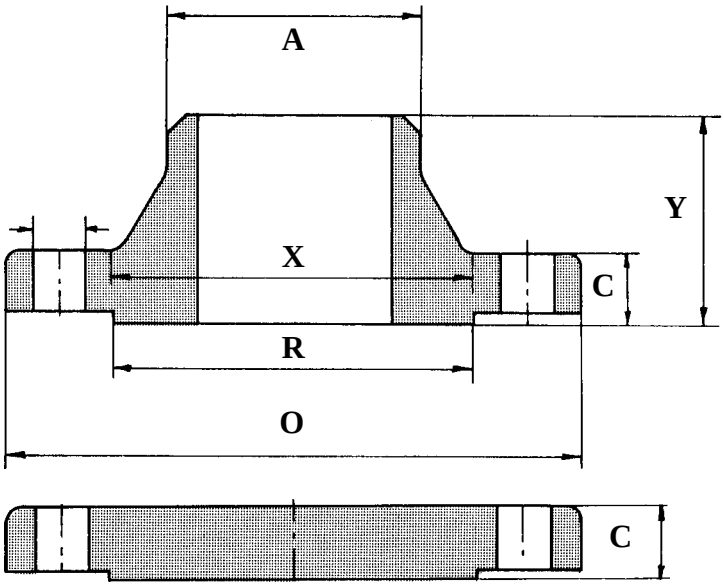

Nominal Pipe Size	Outside Diam. O	Thick-ness WNF C	Thick-ness Blind C	Length thru Hub Y	Diam. at Base of Hub X	Diam. Hub at Bevel A	O.D. of Race Face R	Bolt Circle Diameter	Number of Holes	Diam of Holes	Diam. of Bolt in inch	Radius at base of Hub
54"	1682.8	120.7	120.7	215.9	1403.4	1371.6	1511.3	1593.9	44	47.8	1.3/4	12.7
56"	1746.3	124.0	124.0	228.6	1457.5	1422.4	1574.8	1651.0	48	47.8	1.3/4	12.7
58"	1803.4	128.5	128.5	235.0	1508.3	1473.2	1625.6	1708.2	48	47.8	1.3/4	12.7
60"	1854.2	131.8	131.8	239.8	1559.1	1524.0	1676.4	1759.0	52	47.8	1.3/4	12.7

FITTACKS

300Lbs

Welding Neck Flanges
Asme B 16.47 Series A

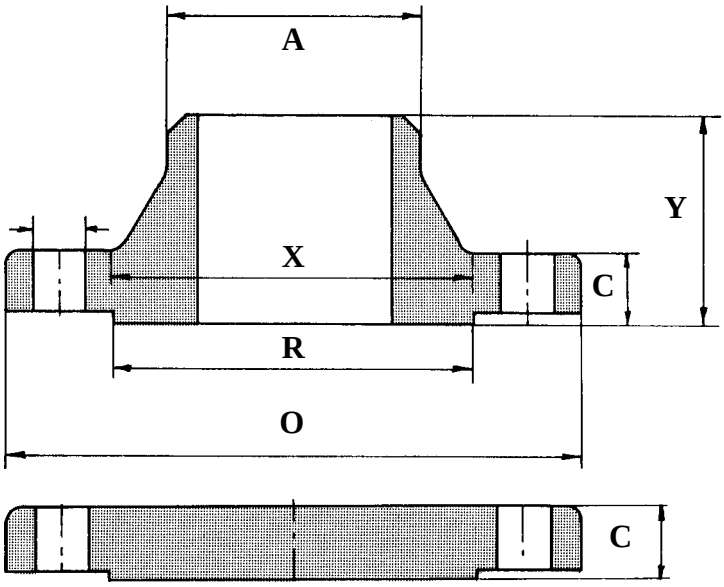

Nominal Pipe Size	Outside Diam. O	Thick-ness WNF C	Thick-ness Blind C	Length thru Hub Y	Diam. at Base of Hub X	Diam. Hub at Bevel A	O.D. of Race Face R	Bolt Circle Diameter	Number of Holes	Diam of Holes	Diam. of Bolt in inch	Radius at base of Hub
26"	971.6	79.2	79.2	184.2	720.9	660.4	749.3	876.3	28	44.5	1.5/8	9.7
28"	1035.1	85.9	85.9	196.9	774.7	711.2	800.1	939.8	28	44.5	1.5/8	11.2
30"	1092.2	91.9	91.9	209.6	827.0	762.0	857.3	997.0	28	47.8	1.3/4	11.2
32"	1149.4	98.6	98.6	222.3	881.1	812.8	914.4	1054.1	28	50.8	1.7/8	11.2
34"	1206.5	101.6	101.6	231.6	936.8	863.6	965.2	1104.9	28	50.8	1.7/8	12.7
36"	1270.0	104.6	104.6	241.3	990.6	914.4	1022.4	1168.4	32	53.8	2	12.7
38"	1168.4	108.0	108.0	180.8	993.6	965.2	1028.7	1092.2	32	41.1	1.1/2	12.7
40"	1238.3	114.3	114.3	193.5	1047.8	1016.0	1085.9	1155.7	32	44.5	1.5/8	12.7
42"	1289.1	119.1	119.1	200.2	1098.6	1066.8	1136.7	1206.5	32	44.5	1.5/8	12.7
44"	1352.6	124.0	124.0	206.2	1149.4	1117.6	1193.8	1263.7	32	47.8	1.3/4	12.7
46"	1416.1	128.5	128.5	215.9	1203.5	1168.4	1244.6	1320.8	28	50.8	1.7/8	12.7
48"	1466.9	133.4	133.4	223.8	1254.3	1219.2	1301.8	1371.6	32	50.8	1.7/8	12.7
50"	1530.4	139.7	139.7	231.6	1305.1	1270.0	1358.9	1428.8	32	53.8	2	12.7
52"	1581.2	144.5	144.5	238.3	1355.9	1320.8	1409.7	1479.6	32	53.8	2	12.7

FITTACKS

300 Lbs

Welding Neck Flanges
Asme B 16.47 Series A

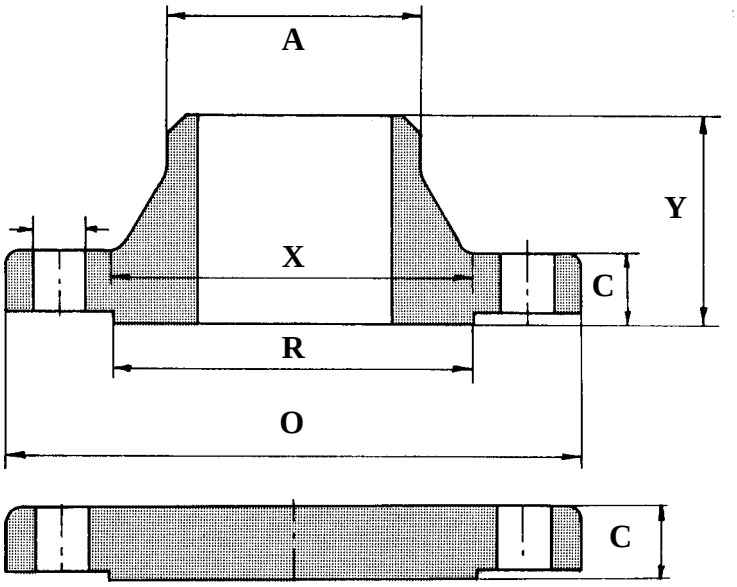

Nominal Pipe Size	Outside Diam. O	Thick-ness WNF C	Thick-ness Blind C	Length thru Hub Y	Diam. at Base of Hub X	Diam. Hub at Bevel A	O.D. of Race Face R	Bolt Circle Diameter	Number of Holes	Diam of Holes	Diam. of Bolt in inch	Radius at base of Hub
54"	1657.4	152.4	152.4	252.5	1409.7	1371.6	1466.9	1549.4	28	60.5	2.1/4	12.7
56"	1708.2	153.9	153.9	260.4	1463.5	1422.4	1517.7	1600.2	28	60.5	2.1/4	12.7
58"	1759.0	158.8	158.8	266.7	1514.3	1473.2	1574.8	1651.0	32	60.5	2.1/4	12.7
60"	1809.8	163.6	163.6	273.1	1565.1	1524.0	1625.6	1701.8	32	60.5	2.1/4	12.7

FITTACKS

400Lbs

Welding Neck Flanges
Asme B 16.47 Series A

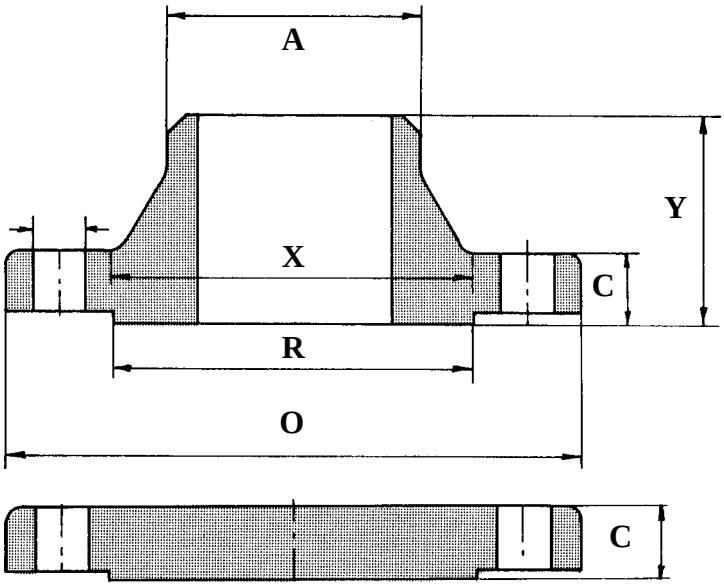

Nominal Pipe Size	Outside Diam. O	Thick-ness WNF C	Thick-ness Blind C	Length thru Hub Y	Diam. at Base of Hub X	Diam. Hub at Bevel A	O.D. of Race Face R	Bolt Circle Diameter	Number of Holes	Diam of Holes	Diam. of Bolt in inch	Radius at base of Hub
26"	971.6	88.9	98.6	193.5	726.9	660.4	749.3	876.3	28	47.8	1.3/4	11.2
28"	1035.1	95.3	104.6	206.2	782.6	711.2	800.1	939.8	28	50.8	1.7/8	12.7
30"	1092.2	101.6	111.3	218.9	836.7	762.0	857.3	997.0	28	53.8	2	12.7
32"	1149.4	108.0	115.8	231.6	889.0	812.8	914.4	1054.1	28	53.8	2	12.7
34"	1206.5	111.3	122.2	241.3	944.6	863.6	965.2	1104.9	28	53.8	2	14.3
36"	1270.0	114.3	128.5	251.0	1000.3	914.4	1022.4	1168.4	32	53.8	2	14.3
38"	1206.5	124.0	124.0	206.2	1003.3	965.2	1035.1	1117.6	32	47.8	1.3/4	14.3
40"	1270.0	130.0	130.0	215.9	1054.1	1016.0	1092.2	1174.8	32	50.8	1.7/8	14.3
42"	1320.8	133.4	133.4	223.8	1107.9	1066.8	1143.0	1225.6	32	50.8	1.7/8	14.3
44"	1384.3	139.7	139.7	233.2	1158.7	1117.6	1200.2	1282.7	32	53.8	2	14.3
46"	1441.5	146.1	146.1	244.3	1212.9	1168.4	1257.3	1339.9	36	53.8	2	14.3
48"	1511.3	152.4	152.4	257.0	1267.0	1219.2	1308.1	1403.4	28	60.5	2.1/4	14.3
50"	1568.5	157.2	158.8	268.2	1320.8	1270.0	1361.9	1460.5	32	60.5	2.1/4	14.3
52"	1619.3	162.1	163.6	276.4	1371.6	1320.8	1412.7	1511.3	32	60.5	2.1/4	14.3

FITTACKS

400 Lbs

Welding Neck Flanges
Asme B 16.47 Series A

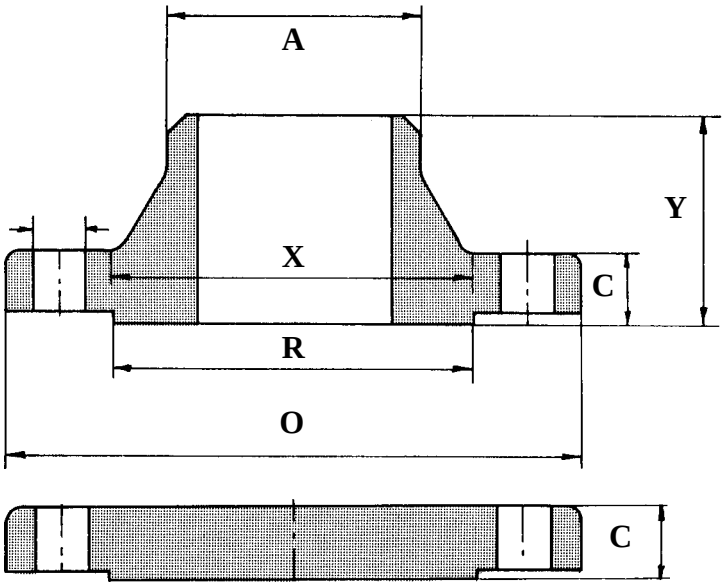

Nominal Pipe Size	Outside Diam. O	Thick-ness WNF C	Thick-ness Blind C	Length thru Hub Y	Diam. at Base of Hub X	Diam. Hub at Bevel A	O.D. of Race Face R	Bolt Circle Diameter	Number of Holes	Diam of Holes	Diam. of Bolt in inch	Radius at base of Hub
54"	1701.8	169.9	171.5	289.1	1425.4	1371.6	1470.2	1581.2	28	66.5	2.1/2	14.3
56"	1752.6	174.8	176.3	298.5	1479.6	1422.4	1527.0	1632.0	32	66.5	2.1/2	14.3
58"	1803.4	177.8	180.8	306.3	1530.4	1473.2	1577.8	1682.8	32	66.5	2.1/2	14.3
60"	1886.0	185.7	189.0	319.0	1584.5	1524.0	1635.3	1752.6	32	73.2	2.1/2	14.3

FITTACKS

600Lbs

Welding Neck Flanges
Asme B 16.47 Series A

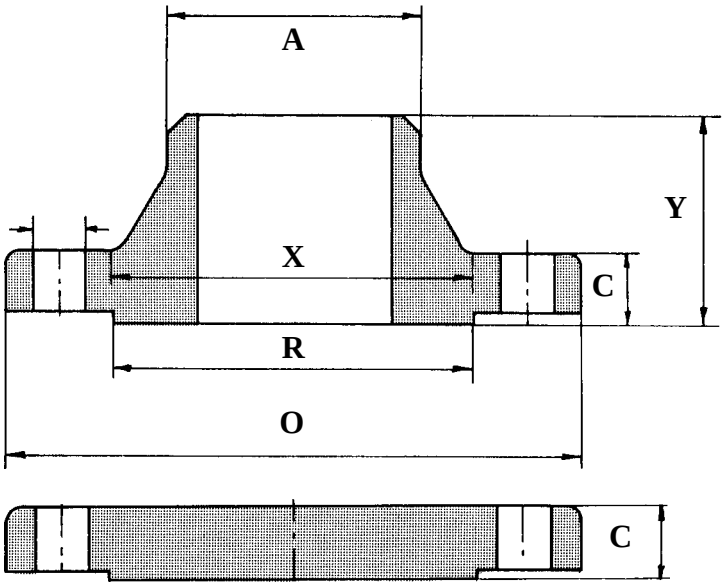

Nominal Pipe Size	Outside Diam. O	Thick-ness WNF C	Thick-ness Blind C	Length thru Hub Y	Diam. at Base of Hub X	Diam. Hub at Bevel A	O.D. of Race Face R	Bolt Circle Diameter	Number of Holes	Diam of Holes	Diam. of Bolt in inch	Radius at base of Hub
26"	1016.0	108.0	125.5	222.3	747.8	660.4	749.3	914.4	28	50.8	1.7/8	12.7
28"	1073.2	111.3	131.8	235.0	803.1	711.2	800.1	965.2	28	53.8	2	12.7
30"	1130.3	114.3	139.7	247.7	862.1	762.0	857.3	1022.4	28	53.8	2	12.7
32"	1193.8	117.3	147.6	260.4	917.4	812.8	914.4	1079.5	28	60.5	2.1/4	12.7
34"	1244.6	120.7	153.9	269.7	973.1	863.6	965.2	1130.3	28	60.5	2.1/4	14.3
36"	1314.5	124.0	162.1	282.4	1031.7	914.4	1022.4	1193.8	28	66.5	2.1/2	14.3
38"	1270.0	152.4	155.4	254.0	1022.4	965.2	1054.1	1162.1	28	60.5	2.1/4	14.3
40"	1320.8	158.8	162.1	263.7	1073.2	1016.0	1111.3	1212.9	32	60.5	2.1/4	14.3
42"	1403.4	168.1	171.5	279.4	1127.3	1066.8	1168.4	1282.7	28	66.5	2.1/2	14.3
44"	1454.2	173.0	177.8	289.1	1181.1	1117.6	1225.6	1333.5	32	66.5	2.1/2	14.3
46"	1511.3	179.3	185.7	300.0	1234.9	1168.4	1276.4	1390.7	32	66.5	2.1/2	14.3
48"	1593.9	189.0	195.3	316.0	1289.1	1219.2	1333.5	1460.5	32	73.2	2.3/4	14.3
50"	1670.1	196.9	203.2	328.7	1343.2	1270.0	1384.3	1524.0	28	79.2	3	14.3
52"	1720.9	203.2	209.6	336.6	1394.0	1320.8	1435.1	1574.8	32	79.2	3	14.3

FITTACKS

600 Lbs

Welding Neck Flanges
Asme B 16.47 Series A

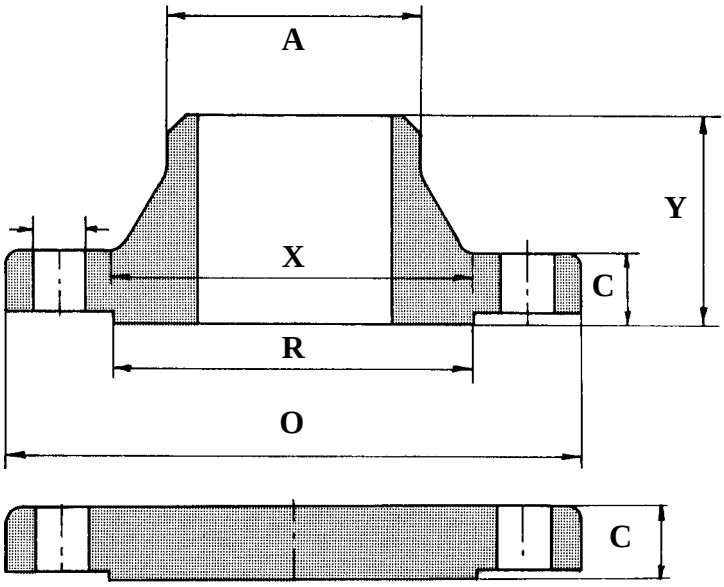

Nominal Pipe Size	Outside Diam. O	Thick-ness WNF C	Thick-ness Blind C	Length thru Hub Y	Diam. at Base of Hub X	Diam. Hub at Bevel A	O.D. of Race Face R	Bolt Circle Diameter	Number of Holes	Diam of Holes	Diam. of Bolt in inch	Radius at base of Hub
54"	1778.0	209.6	217.4	349.3	1447.8	1371.6	1492.3	1632.0	32	79.2	3	14.3
56"	1854.2	217.4	225.6	362.0	1501.6	1422.4	1543.1	1695.5	32	85.9	3.1/4	15.7
58"	1905.0	222.3	231.6	369.8	1552.4	1473.2	1600.2	1746.3	32	85.9	3.1/4	15.7
60"	1993.9	233.4	242.8	388.9	1609.9	1524.0	1657.4	1822.5	28	91.9	3.1/2	17.5

FITTACKS

900Lbs

Welding Neck Flanges
Asme B 16.47 Series A

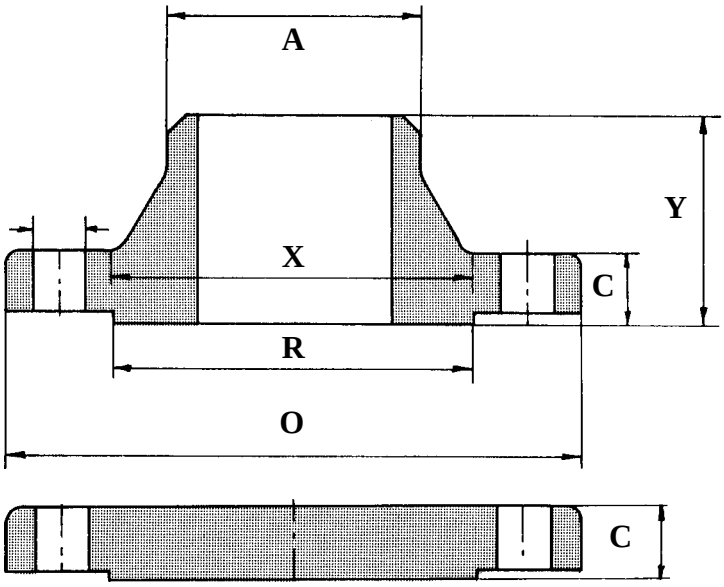

Nominal Pipe Size	Outside Diam. O	Thick-ness WNF C	Thick-ness Blind C	Length thru Hub Y	Diam. at Base of Hub X	Diam. Hub at Bevel A	O.D. of Race Face R	Bolt Circle Diameter	Number of Holes	Diam of Holes	Diam. of Bolt in inch	Radius at base of Hub
26"	1085.9	139.7	160.3	285.8	774.7	660.4	749.3	952.5	20	73.2	2.3/4	11.2
28"	1168.4	142.7	171.5	298.5	831.9	711.2	800.1	1022.4	20	79.2	3	12.7
30"	1231.9	149.4	182.4	311.2	889.0	762.0	857.3	1085.9	20	49.2	3	12.7
32"	1314.5	158.8	193.5	330.2	946.2	812.8	914.4	1155.7	20	85.9	3.1/4	12.7
34"	1397.0	165.1	204.7	349.3	1006.3	863.6	965.2	1225.6	20	91.9	3.1/2	14.2
36"	1460.5	171.5	214.4	362.0	1063.8	914.4	1022.4	1289.1	20	91.9	3.1/2	14.2
38"	1460.5	190.5	215.9	352.6	1073.2	965.2	1098.6	1289.1	20	91.9	3.1/2	19.1
40"	1511.3	196.9	223.8	363.5	1127.3	1016.0	1162.1	1339.9	24	91.9	3.1/2	20.6
42"	1562.1	206.2	231.6	371.3	1176.3	1066.8	1212.9	1390.7	24	91.9	3.1/2	20.6
44"	1648.0	214.4	242.8	390.7	1234.9	1117.6	1270.0	1463.5	24	98.6	3.3/4	22.4
46"	1733.6	225.6	255.5	411.0	1292.4	1168.4	1333.5	1536.7	24	104.6	4	22.4
48"	1784.4	233.4	263.7	419.1	1343.2	1219.2	1384.3	1587.5	24	104.6	4	23.9
50"												
52"												

FITTACKS

75 Lbs

Welding Neck Flanges
Asme B 16.47 Series B

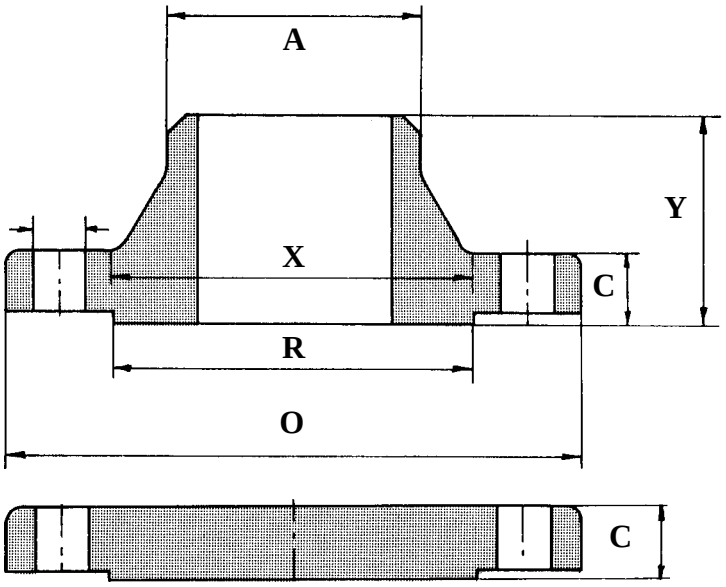

Nominal Pipe Size	Outside Diam. O	Thick-ness WNF C	Thick-ness Blind C	Length thru Hub Y	Diam. at Base of Hub X	Diam. Hub at Bevel A	O.D. of Race Face R	Bolt Circle Diameter	Number of Holes	Diam of Holes	Diam. of Bolt in inch	Radius at base of Hub
26"	762.0	33.3	33.3	58.7	676.2	662.0	704.9	723.9	36	19.1	5/8	7.9
28"	812.8	33.3	33.3	62.0	727.0	712.8	755.7	774.7	40	19.1	5/8	7.9
30"	863.6	33.3	33.3	65.0	777.8	763.6	806.5	825.5	44	19.1	5/8	7.9
32"	914.4	35.1	36.6	69.9	828.6	814.3	857.3	876.3	48	19.1	5/8	7.9
34"	965.2	35.1	38.1	73.2	879.4	865.2	908.1	927.1	52	19.1	5/8	7.9
36"	1033.6	36.6	42.4	85.9	935.0	916.0	965.2	992.1	40	22.4	3/4	9.7
38"	1084.4	38.1	44.5	88.9	985.8	966.7	1016.0	1042.9	40	22.4	3/4	9.7
40"	1135.2	38.1	44.5	92.0	1036.6	1017.5	1066.8	1093.7	44	22.4	3/4	9.7
42"	1185.9	39.6	47.8	95.3	1087.4	1068.3	1117.6	1144.5	48	22.4	3/4	9.7
44"	1251.0	42.9	49.3	104.7	1140.0	1119.1	1174.8	1203.5	36	25.4	7/8	9.7
46"	1301.8	44.5	50.8	108.0	1190.8	1169.9	1225.6	1254.3	40	25.4	7/8	9.7
48"	1352.6	46.0	53.9	111.3	1241.6	1220.7	1276.4	1305.0	44	25.4	7/8	9.7
50"	1403.4	47.8	55.4	115.8	1293.9	1271.5	1327.2	1355.9	44	25.4	7/8	9.7
52"	1457.5	47.8	57.2	120.7	1344.7	1322.3	1378.0	1409.7	48	25.4	7/8	9.7

FITTACKS

75 Lbs

Welding Neck Flanges
Asme B 16.47 Series B

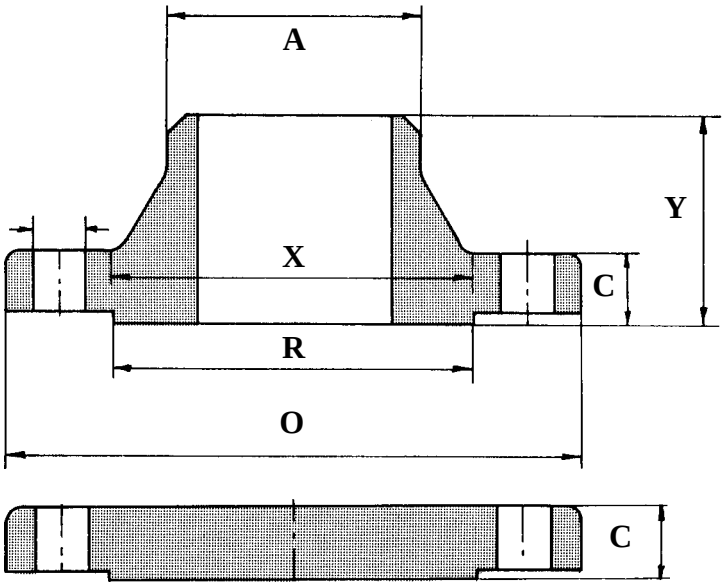

Nominal Pipe Size	Outside Diam. O	Thick-ness WNF C	Thick-ness Blind C	Length thru Hub Y	Diam. at Base of Hub X	Diam. Hub at Bevel A	O.D. of Race Face R	Bolt Circle Diameter	Number of Holes	Diam of Holes	Diam. of Bolt in inch	Radius at base of Hub
54"	1508.3	49.3	60.5	125.5	1397.0	1373.1	1428.8	1460.5	48	25.4	7/8	9.7
56"	1574.8	50.8	62.0	134.9	1450.9	1423.9	1479.6	1521.0	40	28.5	1	11.2
58"	1625.6	52.3	63.5	138.2	1501.7	1474.7	1536.7	1571.8	44	28.5	1	11.2
60"	1676.4	55.6	66.6	144.5	1552.5	1525.5	1587.5	1622.6	44	28.5	1	11.2

FITTACKS

150Lbs

Welding Neck Flanges
Asme B 16.47 Series B

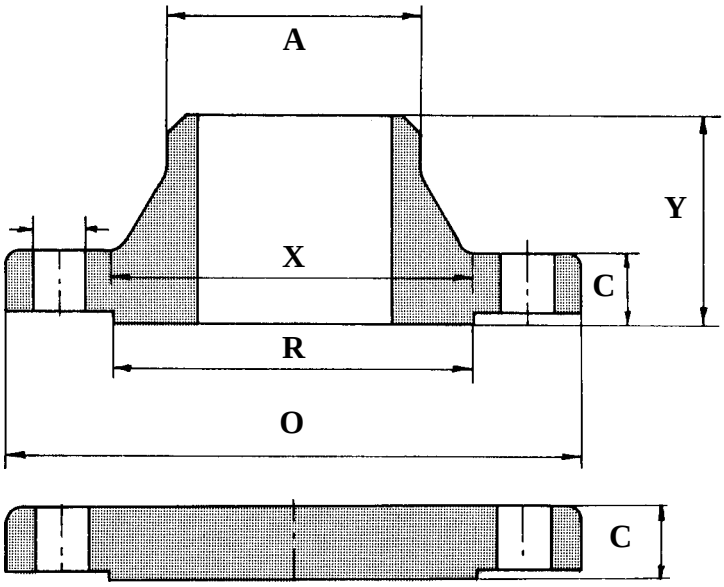

Nominal Pipe Size	Outside Diam. O	Thick-ness WNF C	Thick-ness Blind C	Length thru Hub Y	Diam. at Base of Hub X	Diam. Hub at Bevel A	O.D. of Race Face R	Bolt Circle Diameter	Number of Holes	Diam of Holes	Diam. of Bolt in inch	Radius at base of Hub
26"	785.9	41.1	44.5	88.9	684.3	661.9	711.2	744.5	36	22.4	3/4	9.7
28"	836.7	44.5	47.8	95.3	735.1	712.7	762.0	795.3	40	22.4	3/4	9.7
30"	887.5	44.5	50.8	100.1	787.4	763.5	812.8	846.1	44	22.4	3/4	9.7
32"	941.3	46.0	53.8	108.0	839.7	814.3	863.6	900.2	48	22.4	3/4	9.7
34"	1004.8	49.3	57.2	110.2	892.0	865.1	920.7	957.3	40	25.4	7/8	9.7
36"	1057.1	52.3	58.7	117.3	944.6	915.9	971.5	1009.6	44	25.4	7/8	9.7
38"	1124.0	53.8	63.5	124.0	997.0	968.3	1022.4	1069.8	40	28.4	1	9.7
40"	1174.8	55.6	66.5	128.5	1049.3	1019.0	1079.5	1120.6	44	28.4	1	9.7
42"	1225.6	58.7	68.3	133.4	1101.9	1069.8	1130.3	1171.4	48	28.4	1	11.2
44"	1276.4	60.5	71.4	136.7	1152.7	1120.6	1181.1	1222.2	52	28.4	1	11.2
46"	1341.4	62.0	74.7	144.5	1205.0	1171.4	1234.9	1284.2	40	31.8	1.1/8	11.2
48"	1392.2	65.0	77.7	149.4	1257.3	1222.2	1289.1	1335.0	44	31.8	1.1/8	11.2
50"	1443.0	68.3	80.8	153.9	1308.1	1273.0	1339.9	1385.8	48	31.8	1.1/8	11.2
52"	1494.0	69.9	84.1	157.3	1360.4	1323.8	1390.7	1436.6	52	31.8	1.1/8	11.2

FITTACKS

150 Lbs

Welding Neck Flanges
Asme B 16.47 Series B

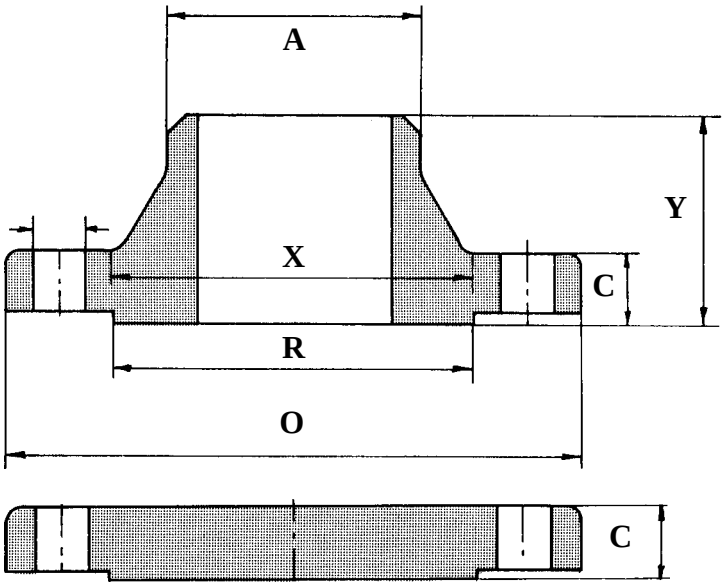

Nominal Pipe Size	Outside Diam. O	Thick-ness WNF C	Thick-ness Blind C	Length thru Hub Y	Diam. at Base of Hub X	Diam. Hub at Bevel A	O.D. of Race Face R	Bolt Circle Diameter	Number of Holes	Diam of Holes	Diam. of Bolt in inch	Radius at base of Hub
54"	1549.4	71.4	87.4	162.1	1412.7	1374.6	1441.5	1492.3	56	31.8	1.1/8	11.2
56"	1600.20	73.2	90.4	166.6	1465.3	1425.4	1492.3	1543.1	60	31.8	1.1/8	14.3
58"	1674.9	74.7	93.5	174.8	1516.1	1476.2	1543.1	1611.4	48	35.1	1.1/4	14.3
60"	1725.7	76.2	96.8	179.3	1570.0	1527.0	1600.2	1662.2	52	35.1	1.1/4	14.3

FITTACKS

300Lbs

Welding Neck Flanges
Asme B 16.47 Series B

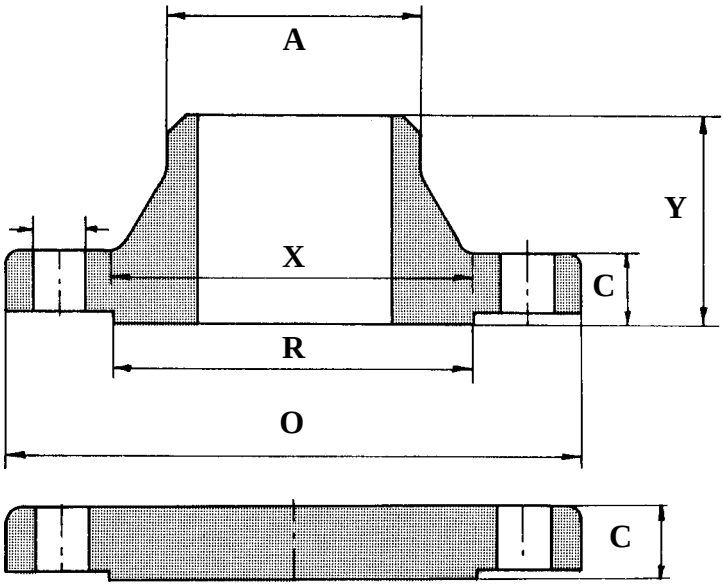

Nominal Pipe Size	Outside Diam. O	Thick-ness WNF C	Thick-ness Blind C	Length thru Hub Y	Diam. at Base of Hub X	Diam. Hub at Bevel A	O.D. of Race Face R	Bolt Circle Diameter	Number of Holes	Diam of Holes	Diam. of Bolt in inch	Radius at base of Hub
26"	866.6	88.9	88.9	144.5	701.5	665.2	736.6	803.1	32	35.1	1.1/4	14.2
28"	920.8	88.9	88.9	149.4	755.7	716.0	787.4	857.3	36	35.1	1.1/4	14.2
30"	990.6	93.7	93.7	158.0	812.8	768.4	844.6	920.8	36	38.1	1.3/8	14.2
32"	1054.1	103.1	103.1	168.1	863.6	819.2	901.7	977.9	32	41.1	1.1/2	15.7
34"	1107.9	103.1	103.1	173.0	917.4	870.0	952.5	1031.7	36	41.1	1.1/2	15.7
36"	1171.4	103.1	103.1	180.8	965.2	920.8	1009.7	1089.2	32	44.5	1.5/8	15.7
38"	1222.2	111.3	111.3	192.0	1016.0	971.6	1060.5	1140.0	36	44.5	1.5/8	15.7
40"	1273.0	115.8	115.8	198.4	1066.8	1022.4	1114.6	1190.8	40	44.5	1.5/8	15.7
42"	13333.5	119.1	119.1	204.7	1117.6	1074.7	1168.4	1244.6	36	47.8	1.3/4	15.7
44"	1384.3	127.0	127.0	214.4	1173.2	1125.5	1219.2	1295.4	40	47.8	1.3/4	15.7
46"	1460.5	128.5	130.0	222.3	1228.9	1176.3	1270.0	1365.3	36	50.8	1.7/8	15.7
48"	1511.3	128.5	134.9	223.8	1277.9	1227.1	1327.2	1416.1	40	50.8	1.7/8	15.7
50"	1562.1	138.2	139.7	235.0	1330.5	1277.9	1378.0	1466.9	44	50.8	1.7/8	15.7
52"	1612.9	142.7	144.3	242.8	1382.8	1328.7	1428.8	1517.7	48	50.8	1.7/8	15.7

FITTACKS

300 Lbs

Welding Neck Flanges
Asme B 16.47 Series B

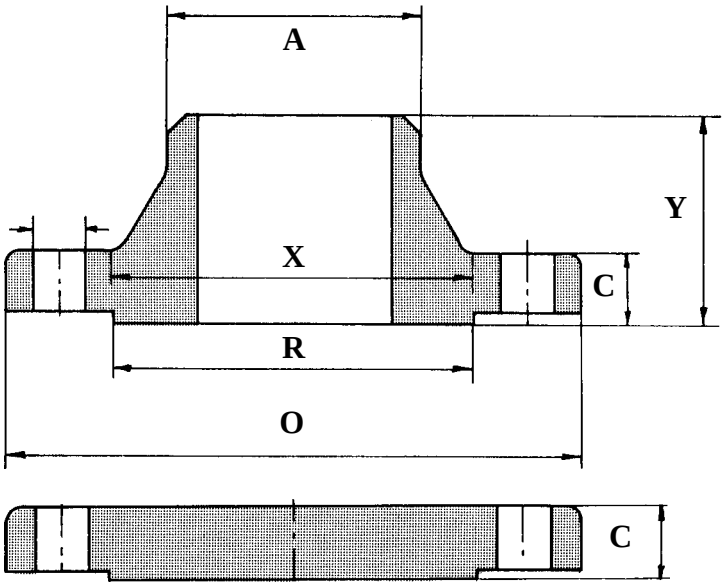

Nominal Pipe Size	Outside Diam. O	Thick-ness WNF C	Thick-ness Blind C	Length thru Hub Y	Diam. at Base of Hub X	Diam. Hub at Bevel A	O.D. of Race Face R	Bolt Circle Diameter	Number of Holes	Diam of Holes	Diam. of Bolt in inch	Radius at base of Hub
54"	1673.4	136.7	149.4	239.8	1435.1	1379.5	1479.6	1577.8	48	50.8	1.7/8	15.8
56"	1765.3	153.9	157.0	268.2	1493.8	1430.3	1536.7	1651.0	36	60.5	2.1/4	17.6
58"	1827.3	153.9	162.1	274.6	1547.9	1481.1	1593.9	1713.0	40	60.5	2.1/4	17.6
60"	1878.1	150.9	166.6	271.5	1598.7	1531.9	1651.0	1763.8	40	60.5	2.1/4	17.6

FITTACKS

400Lbs

Welding Neck Flanges
Asme B 16.47 Series B

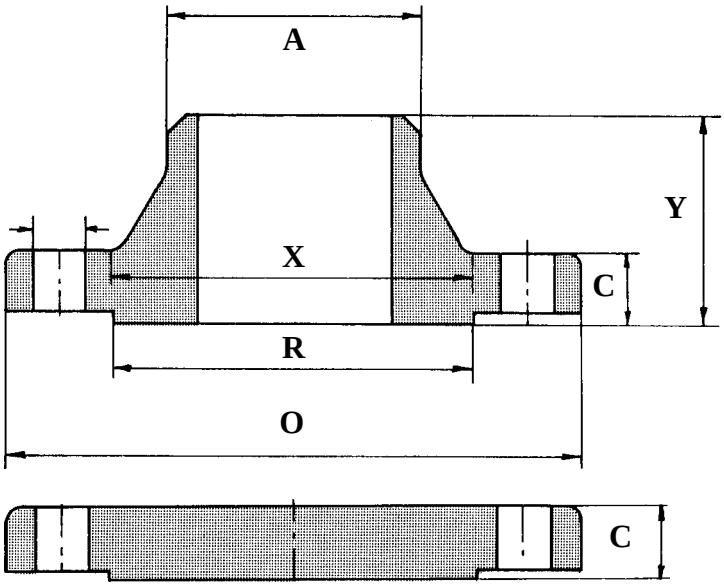

Nominal Pipe Size	Outside Diam. O	Thick-ness WNF C	Thick-ness Blind C	Length thru Hub Y	Diam. at Base of Hub X	Diam. Hub at Bevel A	O.D. of Race Face R	Bolt Circle Diameter	Number of Holes	Diam of Holes	Diam. of Bolt in inch	Radius at base of Hub
26"	850.9	88.9	88.9	149.4	688.8	660.4	711.2	781.1	28	38.1	1.3/8	11.2
28"	914.4	95.3	95.3	158.8	739.6	711.2	762.0	838.2	24	41.1	1.1/2	12.7
30"	971.6	101.6	101.6	169.9	793.8	762.0	819.2	895.4	28	41.1	1.1/2	12.7
32"	1035.1	108.0	108.0	179.3	844.6	812.8	873.3	952.5	28	44.5	1.5/8	12.7
34"	1085.9	111.3	111.3	187.5	898.7	863.6	927.1	1003.3	32	44.5	1.5/8	14.2
36"	1155.7	119.1	119.1	200.2	952.5	914.4	980.9	1066.8	28	47.8	1.3/4	14.2
38"												
40"												
42"												
44"												
46"												
48"												
50"												
52"												

FITTACKS

600Lbs

Welding Neck Flanges
Asme B 16.47 Series B

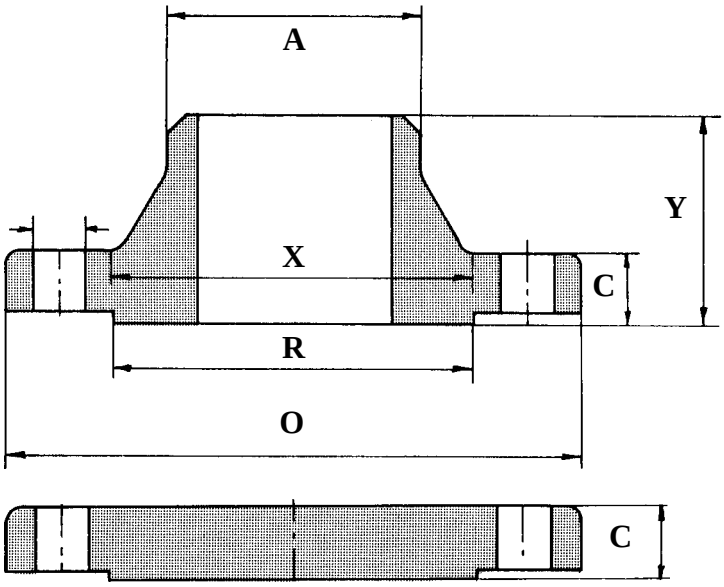

Nominal Pipe Size	Outside Diam. O	Thick-ness WNF C	Thick-ness Blind C	Length thru Hub Y	Diam. at Base of Hub X	Diam. Hub at Bevel A	O.D. of Race Face R	Bolt Circle Diameter	Number of Holes	Diam of Holes	Diam. of Bolt in inch	Radius at base of Hub
26"	889.0	111.3	111.3	180.8	698.5	660.4	726.9	806.5	28	44.5	1.5/8	12.7
28"	952.5	115.8	115.8	190.5	752.3	711.2	784.4	863.6	28	47.8	1.3/4	12.7
30"	1022.4	125.5	127.0	204.7	806.5	762.0	841.2	927.1	28	50.8	1.7/8	12.7
32"	1085.9	130.0	134.9	215.9	860.6	812.8	895.4	984.3	28	53.8	2	12.7
34"	1162.1	141.2	144.3	233.4	914.4	863.6	952.5	1054.1	24	60.5	2.1/4	14.2
36"	1212.9	146.1	150.9	242.8	968.2	914.4	1009.7	1104.9	28	60.5	2.1/4	14.2
38"												
40"												
42"												
44"												
46"												
48"												
50"												
52"												

FITTACKS

900Lbs

Welding Neck Flanges
Asme B 16.47 Serie B

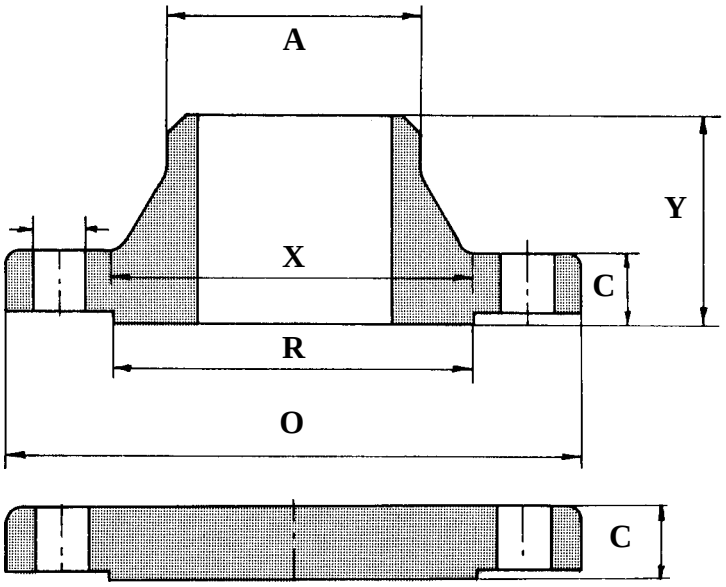

Nominal Pipe Size	Outside Diam. O	Thick-ness WNF C	Thick-ness Blind C	Length thru Hub Y	Diam. at Base of Hub X	Diam. Hub at Bevel A	O.D. of Race Face R	Bolt Circle Diameter	Number of Holes	Diam of Holes	Diam. of Bolt in inch	Radius at base of Hub
26"	1022.4	134.9	153.9	258.8	743.0	660.4	762.0	901.7	20	66.5	2.1/2	11.2
28"	1104.9	147.6	166.6	276.4	797.1	711.2	819.2	971.6	20	73.2	2.3/4	12.7
30"	1181.1	155.4	176.0	289.1	850.9	762.0	876.3	1035.1	20	79.2	3	12.7
32"	1238.3	160.3	185.7	303.3	908.1	812.8	927.1	1092.2	20	79.2	3	12.7
34"	1314.5	171.5	195.1	319.0	962.2	863.6	990.6	1155.7	20	85.9	3.1/4	14.2
36"	1346.2	173.0	201.7	325.4	1016.0	914.4	1028.7	1200.2	24	79.2	3	14.2
38"												
40"												
42"												
44"												
46"												
48"												
50"												
52"												

Orifice Flanges

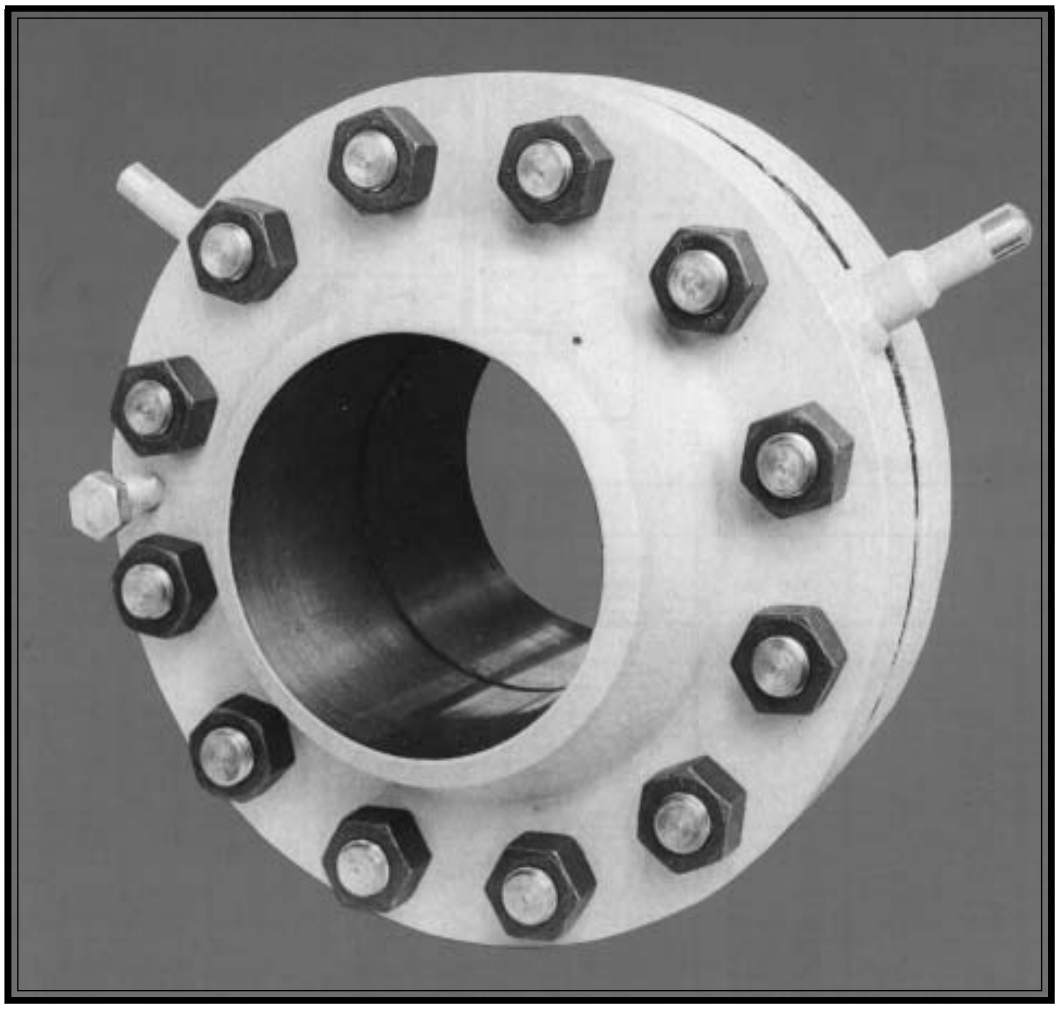

Execution :	**Meets AGA, ANSI, ASME, BS, DIN, ISO and all clients requirements.**
Types :	**Welding neck, slip on, threaded.**
Finish :	**Stock, serrated, smooth raised face, R.T.J.**
Class :	**300, 600, 900, 1500, 2500 lbs.**
Tappings :	**1/2” NPT female (2 tappings per flange is standard). Also available: S.W., B.W. Nipples or Flanged.**
Options :	**Flange taps, corner taps, incl. valves and/or condensate chambers.**

FITTACKS

900 Lbs

Welding Neck
ANSI B 16.5

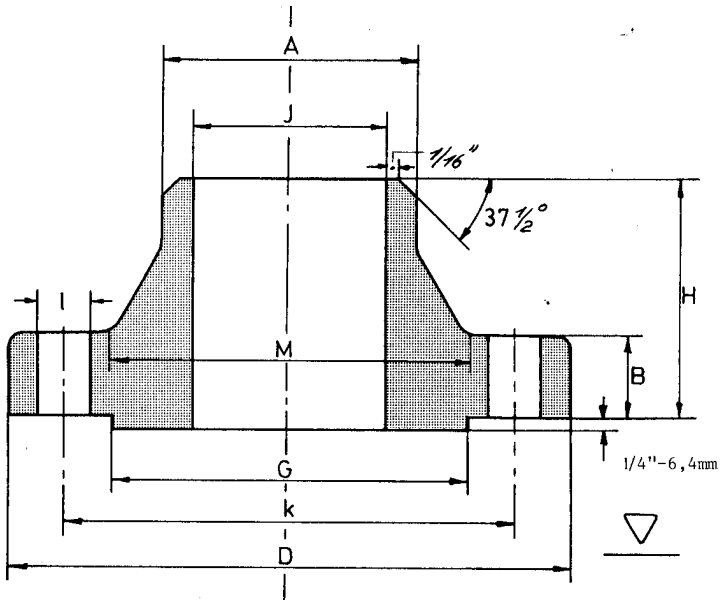

*** Diameter J to be specified.**

Nominal Pipe Size	mm	Outside Diam. D	Diam. of Bore J	Thick-ness Min. B	Length thru Hub H	Diam. Hub at Bevel A	Diam. at Base of Hub M	O.D. Raised Face G	Number of Holes	Diam of Holes I	Bolt Circle Diam. K.	Approx Weight Kg
14"	mm	641.3		85.8	212.8	355.6	450.8	412.7	20	41.1	558.8	180
16"	mm	704.8		88.9	215.9	406.4	508.0	469.9	20	44.4	615.9	217
18"	mm	787.4		101.6	228.6	457.2	565.1	533.4	20	50.8	685.8	298
20"	mm	857.2		107.9	247.6	508.0	622.3	584.2	20	53.8	749.3	362
24"	mm	1041.4		139.7	292.1	609.6	749.3	692.1	20	66.5	901.7	665